Sarix® Multi Enhanced Installation Manual

Document number: C6730M

Publication date: 04/25/25

Table of Contents

Overview 6
- Camera Module 6
  - Camera Back View 6
  - Camera Top View 7
- Surface Mount Adapter 8
- Pendant Mount Adapter 9
- In-Ceiling Mount Adapter 10
- Outdoor Dome Cover 11
- In-Ceiling Dome Cover 12
- Pendant Wall Mount 13
- Pendant NPT Mount 14

Preparing the Installation 15
- Pre-Deployment In-Box Configuration 15

Pendant Mount Installation 16
- Required Tools and Materials 16
- Camera Package Contents 16
- Pendant Mount Installation Steps 16
  - (Optional) Installing the Pendant Wall Mount 16
  - (Optional) Installing the NPT Mount Adapter 18
  - Installing the Pendant Mounting Adapter 20
  - Connecting Cables 21
  - (Optional) Configuring microSD Card Storage 23
  - Initializing a Camera Username and Password 24
  - Assigning an IP Address 24
  - Accessing the Live Video Stream 25
  - Installing the Camera Base to a Pendant Mount 25
  - Aiming the Sarix Multi Enhanced Camera 26
  - (Optional) Installing the IR Illuminator Ring 26
  - Installing the Pendant Mount Dome Cover 27

Surface Mount Installation 30
- Camera Package Contents 30
- Surface Mount Installation Steps 30
  - Installing the Surface Mount Adapter 30
  - Connecting Cables 34
  - (Optional) Configuring microSD Card Storage 36
  - Initializing a Camera Username and Password 37
  - Assigning an IP Address 37
  - Accessing the Live Video Stream 38
  - Installing the Sarix Multi Enhanced Camera Base to a Surface Mount 38
  - Aiming the Sarix Multi Enhanced Camera 39
  - (Optional) Installing the IR Illuminator Ring 39

Installing the Surface Mount Dome Cover ... 40

In-Ceiling Mount Installation ... 43

Camera Package Contents ... 43

In-Ceiling Mount Installation Steps ... 43

Preparing the Camera for In-Ceiling Installation ... 43

(Optional) Cutting the Mounting Hole for the In-Ceiling Mount Adapter ... 44

(Optional) Attaching the Conduit Cable Entry Cover for Plenum Installations ... 45

Installing the In-Ceiling Mounting Adapter ... 46

Connecting Cables ... 47

(Optional) Configuring microSD Card Storage ... 49

Initializing a Camera Username and Password ... 50

Assigning an IP Address ... 50

Accessing the Live Video Stream ... 50

Installing the Sarix Multi Enhanced Camera Base to an In-Ceiling Mount ... 50

Aiming the Sarix Multi Enhanced Camera ... 51

Installing the In-Ceiling Mount Dome Cover ... 52

For More Information ... 53

Cable Connections ... 54

Connecting to Power, Audio, and External Devices ... 54

Pigtail Connector and Wires ... 54

Wiring Audio, I/O, and AUX Power ... 54

Seamless Failover ... 55

Connecting PoE and Auxiliary Power Simultaneously ... 56

Power Source Priorities ... 56

Seamless Failover for Different Operating Conditions ... 57

Power States ... 57

Focusing the Sarix Multi Enhanced Camera ... 57

Connection Status LED Indicator ... 58

Troubleshooting Network Connections and LED Behavior ... 58

Resetting to Factory Default Settings ... 59

Setting the IP Address Using the ARP/Ping Method ... 59

Cleaning ... 60

Dome Bubble ... 60

Body ... 60

Limited Warranty and Technical Support ... 61

Important Safety Information

This manual provides installation and operation information and precautions for the use of this device. Incorrect installation could cause an unexpected fault. Before installing this equipment read this manual carefully. Please provide this manual to the owner of the equipment for future reference.

This Warning symbol indicates the presence of dangerous voltage within and outside the product enclosure that may result in a risk of electric shock, serious injury or death to persons if proper precautions are not followed.

This Caution symbol alerts the user to the presence of hazards that may cause minor or moderate injury to persons, damage to property or damage to the product itself if proper precautions are not followed.

Failure to observe the following instructions may result in severe injury or death.

- Installation must be performed by qualified personnel only, and must conform to all local codes.
- This product is intended to be supplied by a UL Listed Power Unit marked “Class 2” or “LPS” or “Limited Power Source” with output rated:
  - With IR LEDs: 24 V AC ± 10%, 74 VA minimum, or 24 V DC ± 10%, 52 W minimum, PD-9501GR/AC-NA-MSI, or PoE190-BT HPoE 802.BT single port injector 90W.
  - Without IR LEDs: 24 V AC ± 10%, 37 VA minimum, or 24 V DC ± 10%, 26 W minimum, or 25.5 W PoE+, IEEE, 802.3at Type 2, PD-9001GR/AT/AC-MSI, PoE Plus (POE430-AT, POE1236-AT, or POE2436-AT).
- External power connections must be properly insulated.
- Do not connect directly to mains power for any reason.

Failure to observe the following instructions may result in injury to persons or damage to the device.

- Do not install near any heat sources such as radiators, heat registers, stoves, or other sources of heat.
- Do not subject the device cables to excessive stress, heavy loads or pinching.
- Do not open or disassemble the device. There are no user serviceable parts.
- Refer all device servicing to qualified personnel. Servicing may be required when the device has been damaged (such as from a liquid spill or fallen objects), has been exposed to rain or moisture, does not operate normally, or has been dropped.
- Do not use strong or abrasive detergents when cleaning the device body.
- Use only accessories recommended by Pelco.

Regulatory Notices

This device complies with part 15 of the FCC Rules. Operation is subject to the following two conditions: (1) this device may not cause harmful interference, and (2) this device must accept any interference received, including interference that may cause undesired operation.

This Class A digital apparatus complies with Canadian ICES-003 (A)/NMB-3(A).

This device complies with EN 60529 IP66 and IP67 rating (surface mount and pendant mount models).

Note: This equipment has been tested and found to comply with the limits for a Class A digital device, pursuant to part 15 of the FCC Rules. These limits are designed to provide reasonable protection against harmful interference when the equipment is operated in a commercial environment. This equipment generates, uses, and can radiate radio frequency energy and, if not installed and used in accordance with the instruction manual, may cause harmful interference to radio communications. Operation of this equipment in a residential area is likely to cause harmful interference in which case the user will be required to correct the interference at his own expense.

Changes or modifications not expressly approved by the party responsible for compliance could void the user's authority to operate the equipment.

To meet the requirements of the EN 50121-4 Railway Applications Standard, use an external power supply or POE injector that is also compliant with EN 50121-4. Please contact Pelco for assistance regarding supporting equipment.

이 기기는 가정용(B급) 전자파적합기기로서 주로 가정에서 사용하는 것을 목적으로 하며,
모든 지역에서 사용할 수 있습니다.

Warning: Operation of this equipment in a residential environment could cause radio interference.

To meet the requirements of the EN 50130-4 Alarm Systems Applications standard, use an external uninterruptible power (UPS) supply.

The use of EMC compliant support and auxiliary equipment with this device is required in order to fully comply with the EMC regulatory standards.

Disposal and Recycling Information

When this product has reached the end of its useful life, please dispose of it according to your local environmental laws and guidelines.

This equipment contains a coin cell battery.

Risk of fire, explosion, and burns. Do not disassemble, crush, heat above 100°C (212°F), or incinerate.

European Union:

This symbol means that according to local laws and regulations your product should be disposed of separately from household waste. When this product reaches its end of life, take it to a collection point designated by local authorities. Some collection points accept products for free. The separate collection and recycling of your product at the time of disposal will help conserve natural resources and ensure that it is recycled in a manner that protects human health and the environment.

Overview

Camera Module

Camera Back View

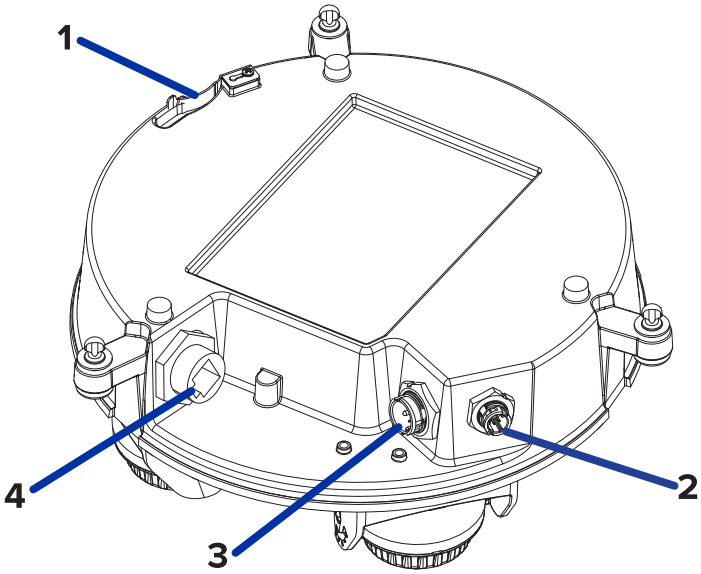

1. **Lanyard anchor**
   The safety lanyard attaches to the anchor to prevent the camera from falling during installation.
2. **IR ring cable connector**
   Accepts IR cable connection to power and control the IR illuminator ring.
3. **Audio, I/O, Aux power connector**

   Accepts connection of the audio, I/O, and Aux power pigtail connector.
4. **Ethernet port**

   Accepts an Ethernet connection to a network. Server communication and image data transmission occurs over this connection. Also receives power when it is connected to a network that provides Power over Ethernet.

Camera Top View

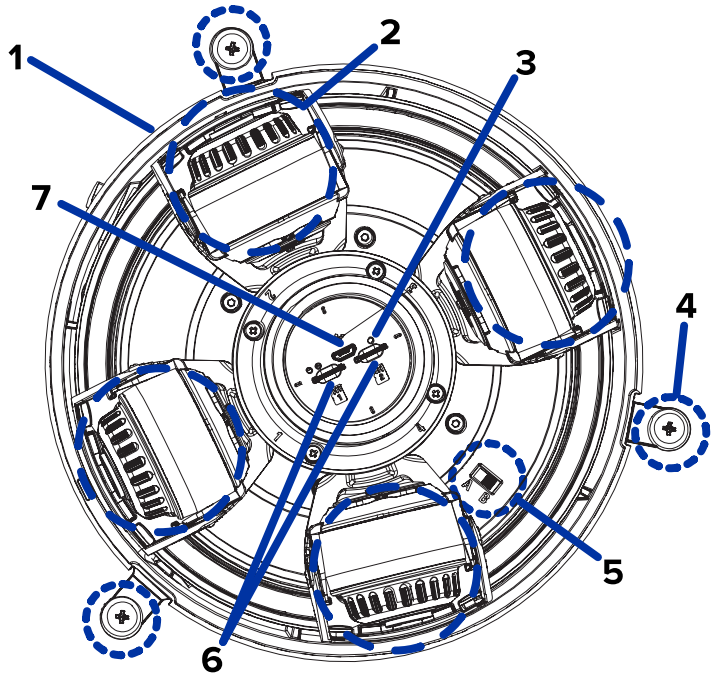

1. **Serial number tag**

   Device information, product serial number and part number label.

2. **Camera heads**

   The multiple camera heads that can be moved, aimed and focused to monitor different scenes.

   Note: There may be three or four camera heads depending on your camera model.

3. **Firmware revert button**

   Resets the camera. For more information, see *Resetting to Factory Default Settings*.

4. **Camera mounting screws**

   Captive screws to fix the camera to the mounting adapter.

5. **PoE Switch**

   Selector switch to provide compatibility with legacy HPoE injectors not compatible with the 802.3bt standard. The "B" position is the default. The "A" position should be used for injectors PD-9501G, PD-9501GR, and PD-9601G.

6. **micro SD card slots**

   Accepts one or two microSD cards for onboard storage.

7. **micro USB connector slot**

   Accepts a micro USB connector for connecting mobile and compact devices.

Surface Mount Adapter

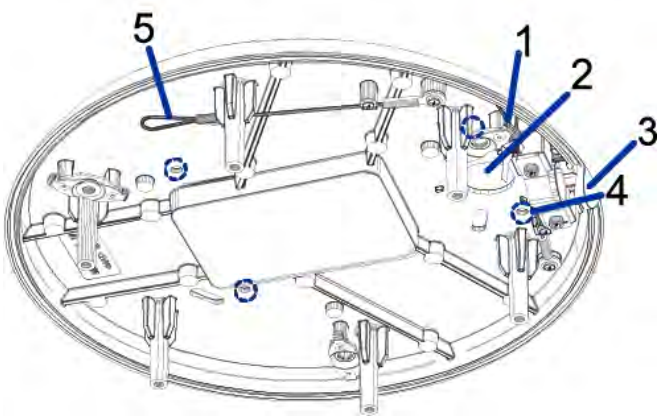

1. **Lanyard to camera**

   Connects to the lanyard anchor on the camera base.
2. **Cable entry hole (rear)**

   An entry hole for the cables required for camera operation.
3. **Cable entry hole (side)**

   An entry hole for the cables required for camera operation.
4. **Mounting holes**

   Mounting points for the mount adapter.
5. **Lanyard to dome cover**

   Connects to the lanyard anchor on the dome cover.

Pendant Mount Adapter

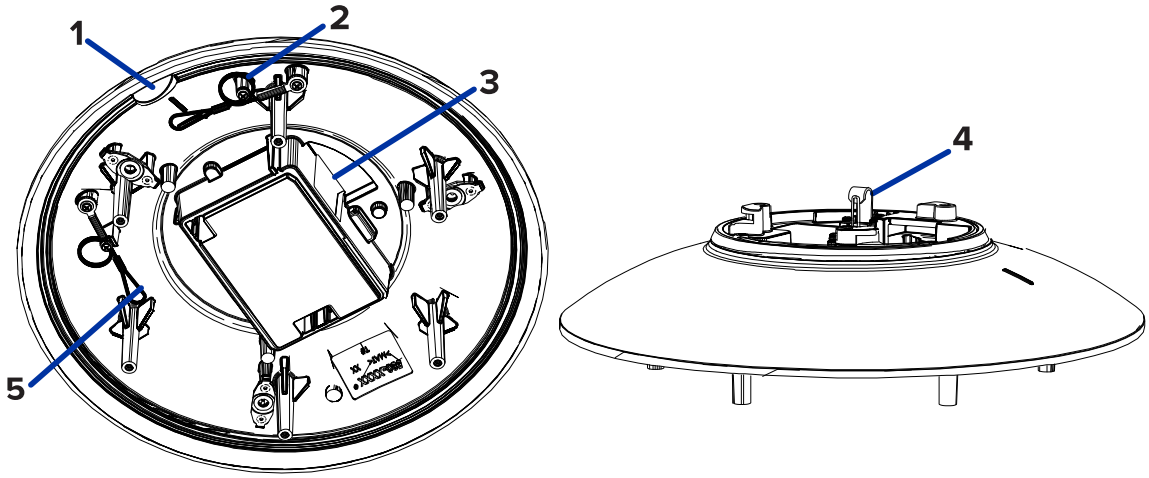

1. **Alignment tab**

   An alignment tab is used to align with the lanyard clip on the dome cover.

2. **Lanyard to dome cover**

   Connects to the lanyard anchor on the dome cover.

3. **Cable entry hole**

   An entry hole for the cables required for camera operation.

4. **Lanyard anchor**

   The safety lanyard attaches to the anchor to prevent the adapter from falling during installation.

5. **Lanyard to camera**

   Connects to the lanyard anchor on the camera base.

In-Ceiling Mount Adapter

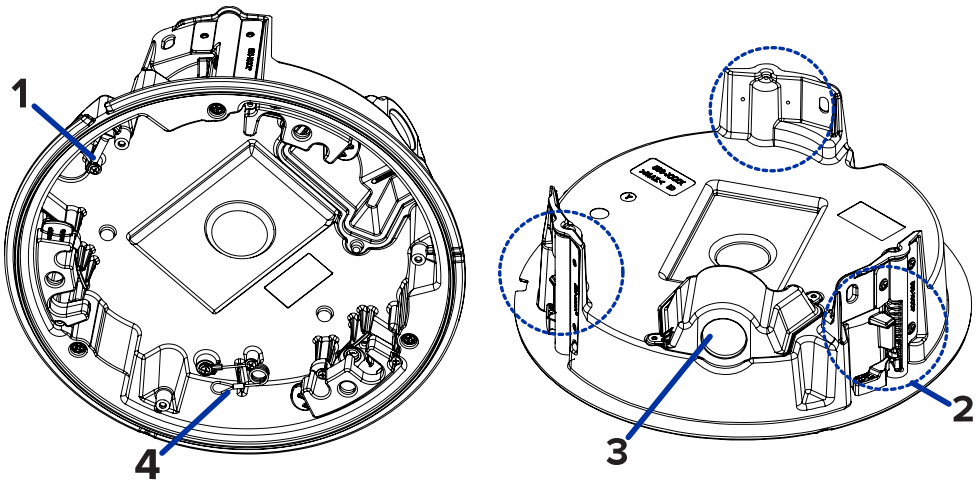

1. **Lanyard to camera**

   Connects to the lanyard anchor on the camera base.

2. **Clamps**

   Spring loaded locking mechanisms that secure the camera to the mounting surface.

3. **Cable entry hole and conduit cable entry cover**

   An entry hole for the cables required for camera operation.

4. **Lanyard to dome cover**

   Connects to the lanyard anchor on the dome cover.

Outdoor Dome Cover

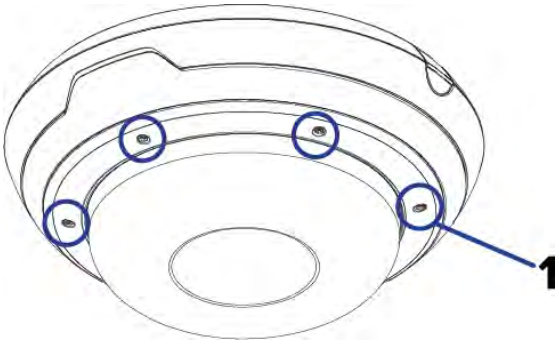

1. **Tamper resistant screws**

   Star-shaped captive screws to fix the dome cover to the base.

   Note: There are 6 captive screws on the dome cover. Only 4 screws are shown in the figure above.

In-Ceiling Dome Cover

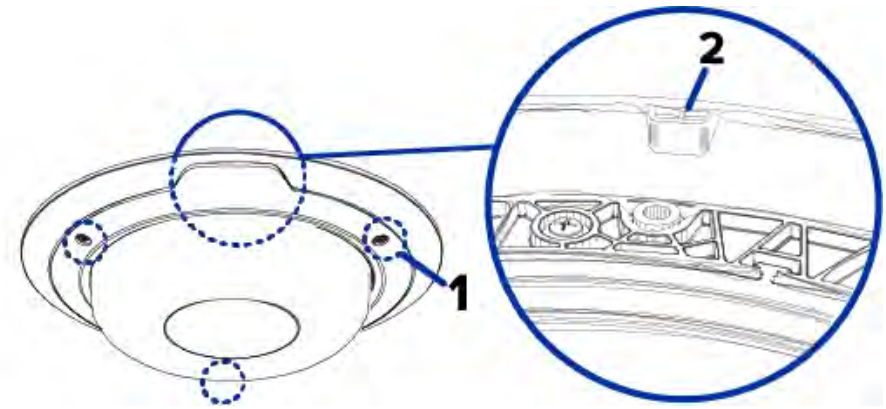

1. **Tamper resistant screws**

   Star-shaped captive screws to fix the dome cover to the base.

2. **Dome cover notch**

   Notch used to align the dome cover with the mounting adapter clip notch when installing the dome cover.

Pendant Wall Mount

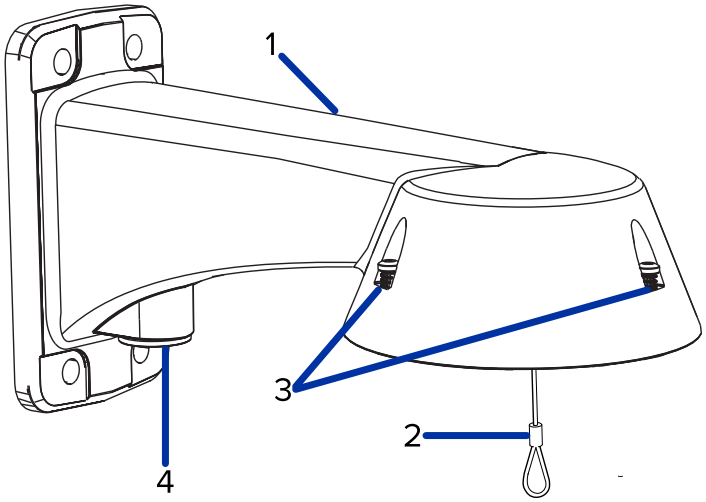

1. **Pendant wall mount**
   Camera mount for walls and other mounting surfaces.
2. **Lanyard**

   Connects to the lanyard anchor on the mounting adapter.
3. **Tamper resistant screws**

   Star-shaped captive screws to fix the mounting adapter to the pendant wall mount.

   Note: There are 3 captive screws on the pendant mount. Only 2 screws are shown in the figure above.
4. **NPT pipe entry hole**
   A 3/4” NPT threaded hole for NPT pipe conduits.

Pendant NPT Mount

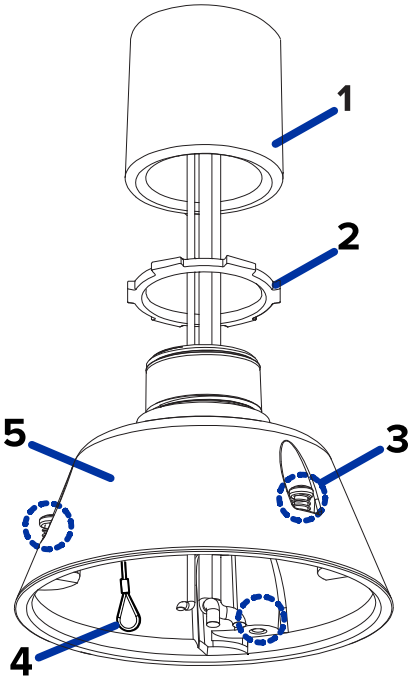

Note: The NPT pipe and NPT-female to NPT-female adapter are not supplied by Pelco and should be sourced separately. However, if you are using the NPT adapter (NPTA-1001), the lock nut is included.

1. **NPT-female to NPT-female adapter**

   Adapter used for mounting NPT adapter (NPTA-1001) to an NPT pipe.

2. **Lock nut**

   Locking nut for securing the pendant NPT mount on the NPT pipe.

3. **Tamper resistant screws**

   Star-shaped captive screws to fix the mounting adapter to the pendant NPT mount.

   Note: There are 3 captive screws on the NPT mount. Only 2 screws are shown in the figure above.

4. **Lanyard**

   Connects to the lanyard anchor on the mounting adapter.

5. **NPT adapter**

   Used to mount the dome camera to NPT pipes.

Preparing the Installation

Pre-Deployment In-Box Configuration

The camera comes equipped with an RJ45 configuration cable pre-installed for users that want to configure camera settings before installing the camera. The RJ45 connector on the configuration cable is accessible through the small flap on the side of the camera box for easy configuration before unpacking the camera.

We recommend that you do not exceed 3 hours of leaving your camera connected during in-box configuration with ambient temperatures between 20 °C – 25 °C (68 °F – 77 °F).

1. Locate and open the flap on the side of the camera packaging.
2. Connect a network cable to the RJ45 plug on the configuration cable. The network cable must provide PoE. IEEE 802.3af Class 3, to power the camera during configuration.
3. Connect to the camera using a video management system, the Camera Configuration Tool, or the camera's web browser interface to configure the camera's settings. For more information about connecting to the camera, see *Assigning an IP Address*, and *Accessing the Live Video Stream*.
4. Once you have finished making configuration changes, unplug the network cable.

Warning: Be careful when handling the camera after configuring it inside the packaging. The camera may be hot when handling it or removing from the packaging immediately after in-box configuration.

Pendant Mount Installation

Required Tools and Materials

The following tools are required to complete the installation but are not included in the package:

If you will be installing the NPT adapter (NPTA-1001), you will need:

- 1-1/2" NPT female to female adapter
- NPT pipe

Camera Package Contents

The Sarix Multi Enhanced camera has a variety of different mounting, dome cover, camera and accessory options. The components for each Sarix Multi Enhanced camera will arrive in a camera package, a dome cover package, a mounting adapter package, and a mount package (for pendant mount cameras).

Ensure the camera package contains the following:

- Pelco Sarix Multi Enhanced Camera module. A 3- or 4-sensor camera module with 3 MP, 5 MP, or 4K (8 MP) resolution per sensor.
- Audio, external power, and I/O pigtail cable connector
- RJ45 CAT5E plugs (x2)
- RJ45 connector waterproof gland

Ensure the Pendant mount adapter package contains the following:

- Pendant mount adapter (IMD1-PMT)
- Installation instructions sheet

If you are installing the camera with the pendant wall mount, ensure the package includes the following:

- Pendant wall mount (WLMT-1001)
- Mounting template sticker

If you are installing the camera with the NPT mount, ensure the package includes the following:

- NPT mount (NPTA-1001)
- Lock nut
- Thread sealing tape

Ensure the dome cover package contains the following:

- Clear or smoked dome bubble and cover (IMD1-SPLD1 or IMD1-SPLD0)

If you are installing the camera with the optional IR illuminator, ensure the package includes the following:

- IR illuminator ring (IMD1-IR)

Pendant Mount Installation Steps

Complete the following sections to install the device.

(Optional) Installing the Pendant Wall Mount

Use the procedure below to install the pendant wall mount (WLMT-1001) for use with the Sarix Multi Enhanced pendant mount adapter (IMD1-PMT).

The dome camera must be mounted as instructed below or problems with moisture may arise and will not be covered by the dome camera warranty.

1. Determine where the cables will enter the pendant wall mount.
   - If the cables will be pulled from inside the mounting surface, use the cable entry hole at the rear of the pendant wall mount.
   - If the cables will be coming out of an external conduit pipe, use the 3/4” NPT pipe entry hole on the bottom of the pendant wall mount.
2. Use the provided mounting template to drill four mounting holes into the mounting surface.
   - If you are using the rear cable entry hole, also drill the cable entry hole into the mounting surface.
3. Pull the required cables through the preferred cable entry hole on the pendant wall mount.
   - If you are using the pipe entry hole, pull the cables through the pipe conduit then the wall mount. Next, apply thread seal tape to the pipe conduit and screw it into the pipe entry hole.
4. Fasten the pendant wall mount to the mounting surface.

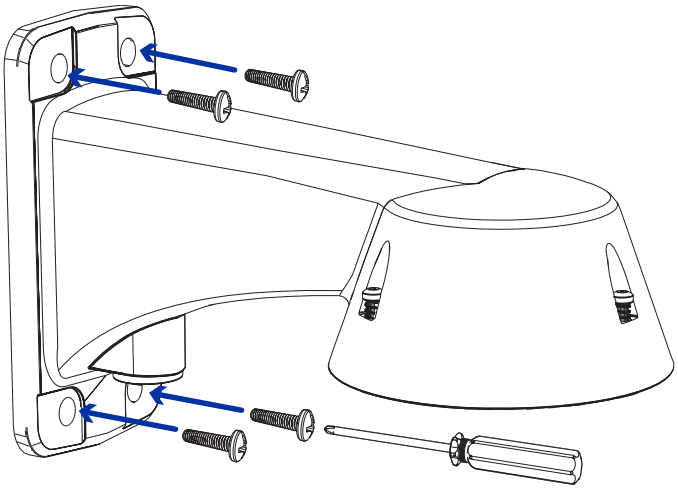

5. Tighten the wall mount screws to secure the wall mount to the wall.
6. Connect the safety lanyard from the mount to the anchor on the pendant adapter.

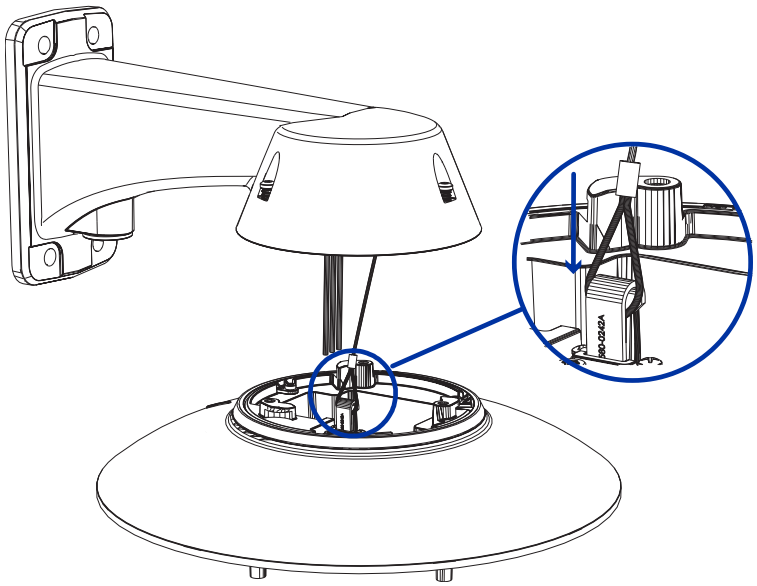

7. Pull the cables through the pendant wall mount.

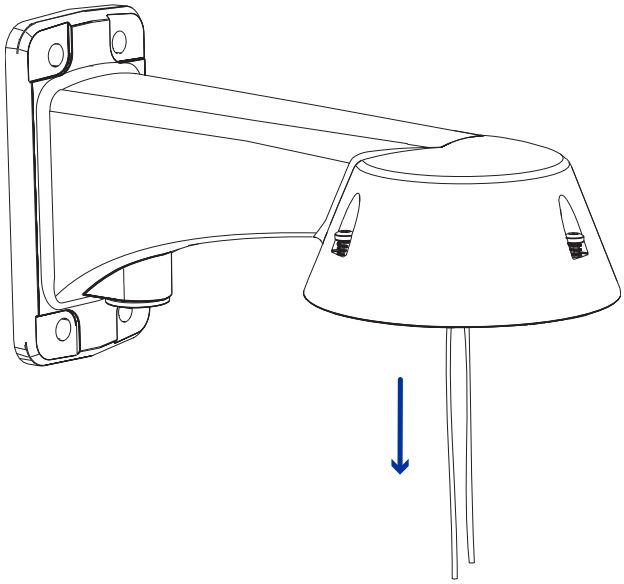

(Optional) Installing the NPT Mount Adapter

The dome camera must be mounted as instructed below or problems with moisture may arise and will not be covered by the dome camera warranty.

If you are installing the Sarix Multi Enhanced camera with an NPT adapter (NPTA-1001), the dome camera must be mounted on a 1-1/2” NPT female threaded wall or ceiling mounting bracket. The mounting bracket is not included in the camera package.

Note: The NPT pipe and NPT-female to NPT-female adapter are not supplied by Pelco and should be sourced separately. However, if you are using the NPT adapter (NPTA-1001), the lock nut is included.

1. Wrap the thread of the NPT adapter with the supplied thread-sealing tape to create a water tight seal around the camera connection. There should be three to five turns around the entire threaded surface.
   When applying the thread-sealing tape, wrap the tape clockwise.

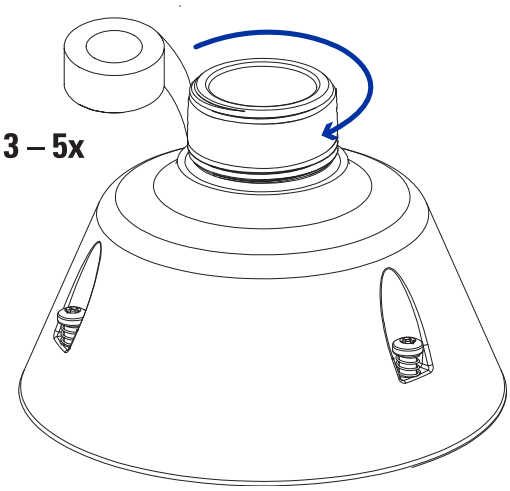

   This will ensure the tape does not unravel when installing the mating parts together.

   Tip: Always apply thread-sealing tape to threaded mounts to help prevent the threads from binding.

2. Loosely thread the lock nut onto the NPT adapter, then secure the NPT adapter into the wall or ceiling mounting bracket.

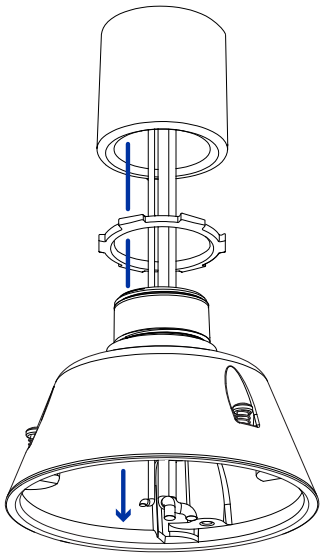

3. Connect the safety lanyard from the mount to the anchor on the pendant adapter.

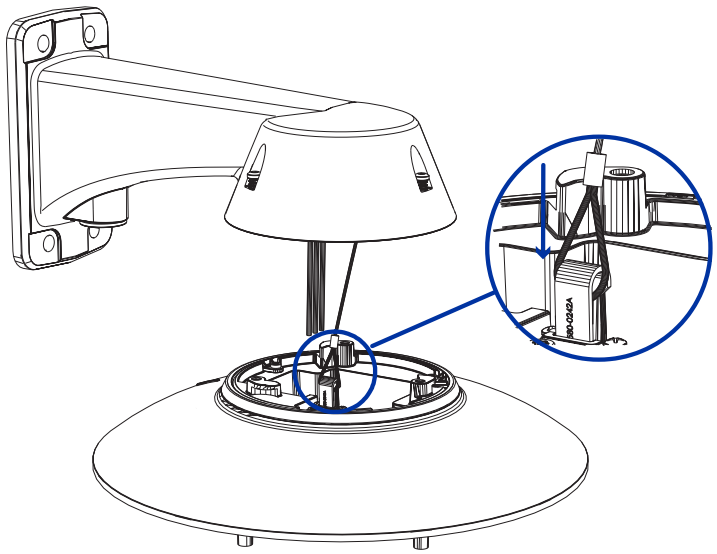

4. Pull the cables through the mounting bracket and adapter.

Installing the Pendant Mounting Adapter

Use the following procedure to mount the pendant adapter (IMD1-PMT) into a pendant wall mount (WLMT-1001) or NPT mount (NPTA-1001).

1. Connect the pendant adapter to the mount. In one smooth motion, raise the adapter into the mount (a) and then turn clockwise to lock the adapter in place (b).

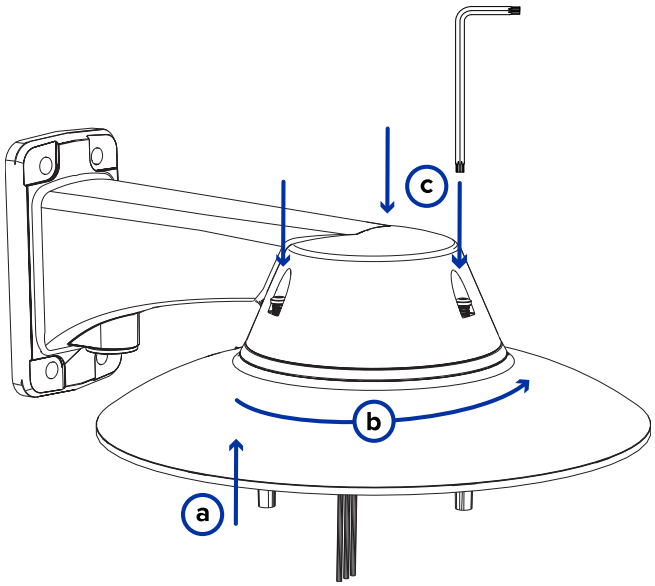

2. Use a screwdriver to tighten the 3 setscrews at the top of the mount to secure the pendant adapter to the mount (c).

Connecting Cables

Refer to the diagrams in the Overview section for the location of the different connectors.

To connect the cables required for proper operation, complete the following:

1. Feed the network cable through the gland cap and cable gland. Crimp the RJ-45 cable connector (supplied) to the end of your network cable.

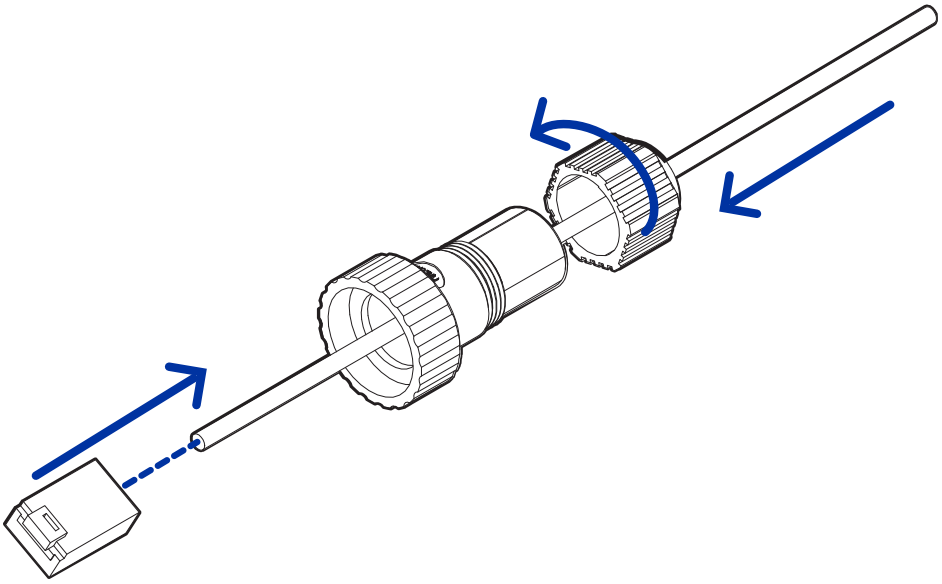

The network cable connection can also be used to supply power to the camera using Power over Ethernet (PoE). If using PoE, connect a PoE compliant injector or switch to the Ethernet network cable with the output rated:

- With IR Ring: 60W PoE mid-span injector (POE60U-1BTE). Alternatively, connect to a Cisco® UPoE capable switch, supporting 60W over 4 pairs. Note that the Cisco switch must be configured with the *Force Four Pair* option enabled.
- Without IR Ring: Power over Ethernet (PoE) Plus, PD-9001GR/AT/AC-MSI, IEEE 802.3at Class 4 — Connect a PoE Plus compliant injector or switch (e.g. POE430-AT, POE1236-AT, or POE2436-AT).

Note: When on UPoE and without an IR ring, the Sarix Multi Pro will continue to request 60W power on startup, as the IR ring is a hot-pluggable add-on accessory. If the IR ring accessory will never be used, the recommendation is to limit the available power to PoE plus equivalent on the Cisco switch settings.

2. Connect the following optional connections to the supplied pigtail I/O connector. See *Connecting to Power, Audio, and External Devices* for more information on the different connections.

   a. If external input or output devices are part of the installation (for example: door contacts, relays, etc.), wire those devices to the pigtail connector.

   b. If an external microphone or speaker is required, connect the devices to the pigtail connector.

   c. If external power is required, connect an external "Class 2" or "LPS" or "Limited Power Source" to the pigtail connector with output rated:

- With IR Ring: 24 VAC ± 10%, 74 VA minimum, or 24 VDC ± 10%, 52 W minimum.
- Without IR Ring: 24 VAC ± 10%, 37 VA minimum, or 24 VDC ± 10%, 26 W minimum.

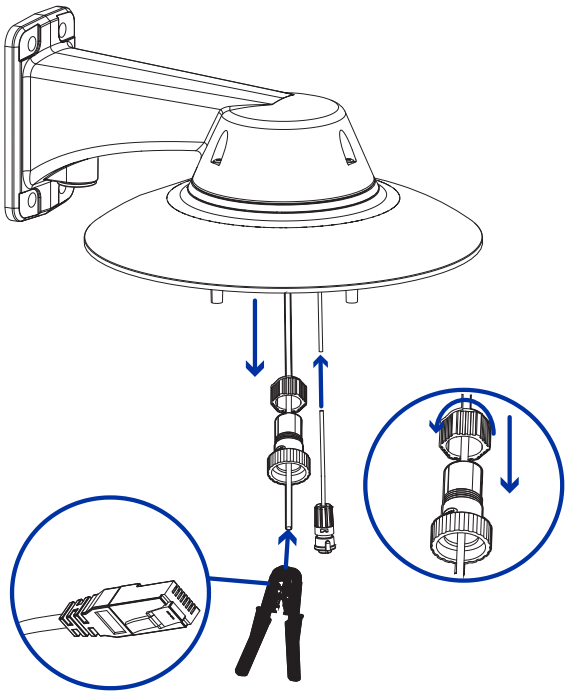

3. Connect the safety lanyard from the mounting adapter to the lanyard anchor on the camera base.

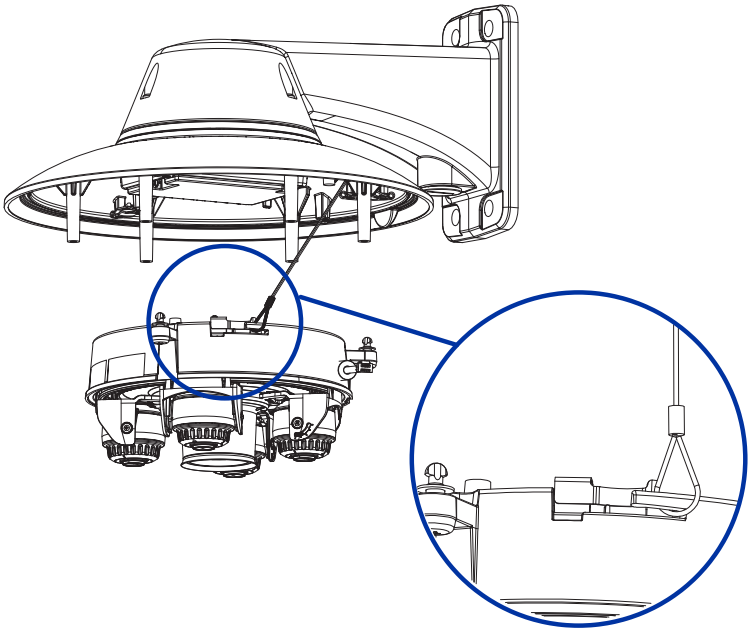

4. Tighten the cable glands around the cables.

5. Remove the connector covers from the external power/audio/digital I/O connector and the optional IR illuminator connector.

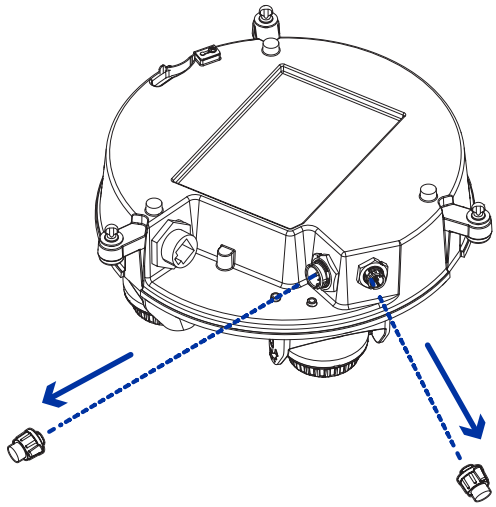

6. Connect the network cable to the Ethernet port (1) and the external power/audio/digital I/O cable to its connector (2). Secure the connections by turning them clockwise (3). For information about using redundant power with seamless failover, refer to *Seamless Failover*.

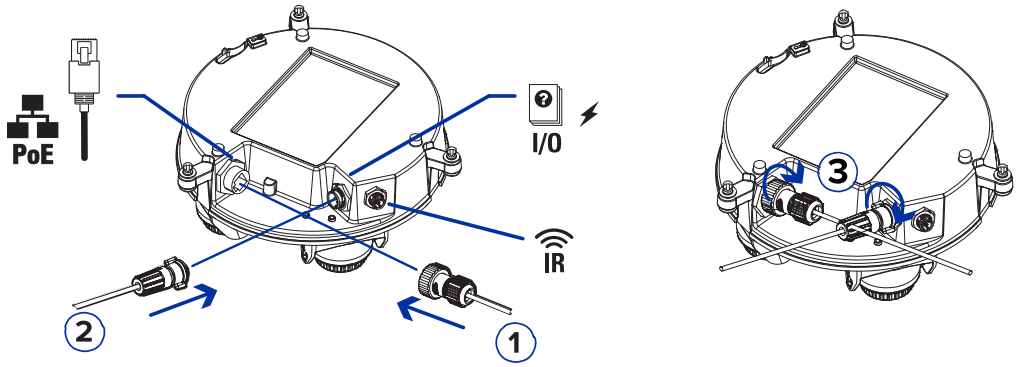

The Link LED will turn on once a network link has been established.

7. Check that the Connection Status LED indicator indicates the correct state. For more information, see *Connection Status LED Indicator*.

(Optional) Configuring microSD Card Storage

To use the camera's SD card storage feature, you must insert one or two microSD cards into the card slot.

It is recommended that the microSD card have a write speed of class 10 or better. If the microSD card does not meet the recommended write speed, the recording performance may suffer and result in the loss of frames or footage.

1. Insert one or two microSD card into the camera.

   Note: You can now use one or both SD card slots. The camera will record video to both SD card slots simultaneously if two SD cards are inserted. The total storage capacity of the system is the combined storage capacity of each of the individual cards.

   Insertion of the microSD card(s) is spring loaded. Do not force the microSD card(s) into the camera or you may damage the card and the camera.

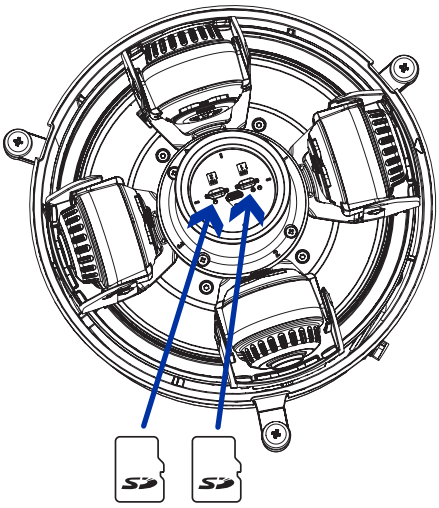

2. Access the camera's web interface to enable the onboard storage feature. For more information, see the *Pelco Sarix Multi Enhanced Camera Operations Manual*.

Initializing a Camera Username and Password

Important: You must create a user with administrator privileges before the camera is operational.

If the camera is in the factory default state, you will be redirected to the *New User* page to create an administrator user:

1. Enter a new *User Name* or keep the default administrator name.
2. Enter a new *Password* for the user. It is recommended to use a secure and complex password.
3. Confirm the new password.
4. For the first user, *Administrator* must be selected in the *Security Group* drop-down menu.
5. Click **Apply**. After creating the user, you will be asked to login.

Tip: If you are connecting your Pelco camera to a 3rd party VMS, you will need to set up the first user through the camera's Web Interface or Camera Configuration Tool before you connect to the 3rd party VMS.

Assigning an IP Address

The device automatically obtains an IP address when it is connected to a network.

Note: If the device cannot obtain an IP address from a DHCP server, it will use Zero Configuration Networking (Zeroconf) to choose an IP address. When set using Zeroconf, the IP address is in the 169.254.0.0/16 subnet.

The IP address settings can be changed using one of the following methods:

- Device's web browser interface: http://*<camera IP address>/*.
- Network Video Management software application (for example, the Pelco VideoXpert software).
- ARP/Ping method. For more information, see *Setting the IP Address Using the ARP/Ping Method*.

Accessing the Live Video Stream

Live video stream can be viewed using one of the following methods:

- Web browser interface: http://*< camera IP address>/*.
- Network Video Management software application (for example, the Pelco VideoXpert software).

Installing the Camera Base to a Pendant Mount

After the cable connections have been made, mount the Sarix Multi Enhanced camera base into the pendant mount adapter.

1. Inspect the PoE switch setting in the camera base to verify it is set correctly for your installation. The "B" position is the default position that is compatible with the 802.3bt standard. The "A" position should be used for legacy HPoE injectors PD-9501G, PD-9501GR, and PD-9601G. For more information, see the *Overview* section.
2. (Recommended) Attach a safety lanyard from the pendant mount adapter to the lanyard anchor on the camera base to prevent the camera from falling. See *Connecting Cables*.
3. Push the camera base into the pendant adapter so that the quick install fasteners in the camera base align with the screw holes in the pendant adapter.

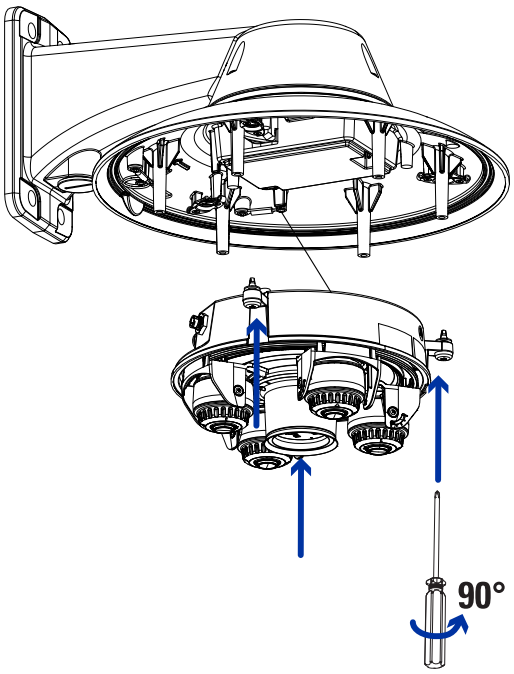

4. Use a screwdriver to turn the 3 setscrews clockwise by 90° and secure the camera to the pendant mount adapter.

Aiming the Sarix Multi Enhanced Camera

Reference the camera's live stream as you aim the camera.

1. To aim the camera, adjust each of the available camera heads as required:

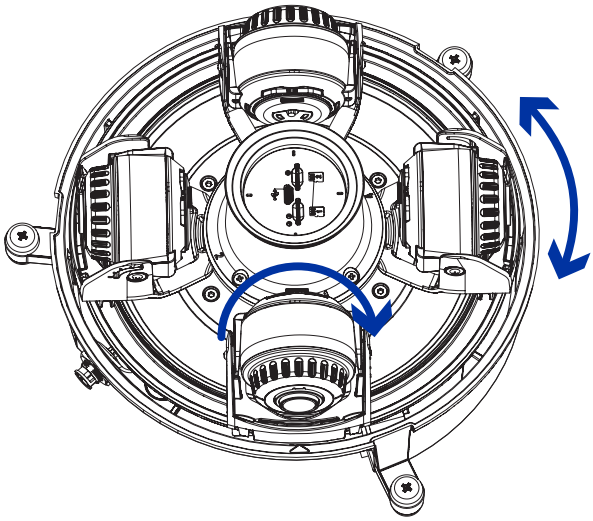

2. In the camera web browser interface, adjust the camera’s Image and Display settings to achieve the desired image parameters and position.

(Optional) Installing the IR Illuminator Ring

Note: The optional IR illuminator ring (IMD1-IR) is compatible with the pendant and surface mount installations of the Sarix Multi Enhanced camera. The hot-pluggable IR illuminator ring must be mounted in an outdoor dome cover (IMD1-SPLD1 or IMD1-SPLD0).

After the camera has been mounted into the mounting adapter, install the IR illuminator ring with the Sarix Multi Enhanced camera base:

1. Mount the IR illuminator ring into the dome cover (IMD1-SPLD1 or IMD1-SPLD0):
   a. Insert the IR ring into the dome cover so that the orange arrow on the IR ring aligns with the orange tab on the dome cover.

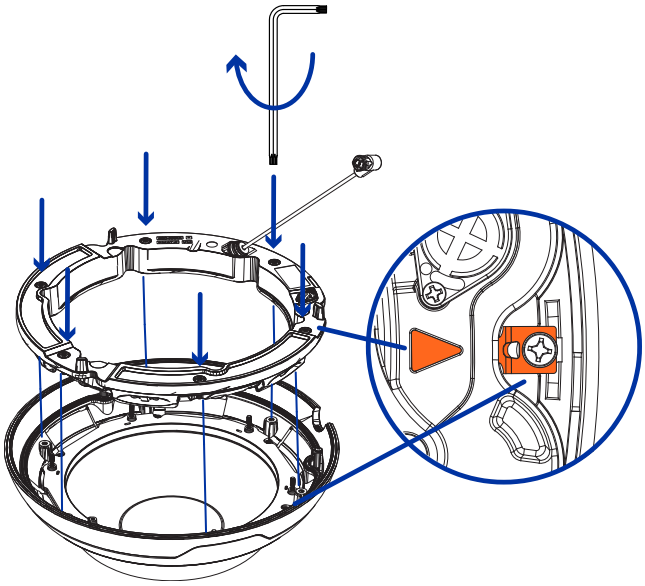

b. Use a screwdriver to secure the IR ring to the dome cover by tightening the 6 setscrews.

2. (Recommended) Attach a safety lanyard from the mounted camera to the lanyard anchor on the dome cover to prevent the cover from falling. See *Installing the Pendant Mount Dome Cover*.
3. Push the IR ring cable onto IR connector on the camera base and turn the connector clockwise to secure the connection.

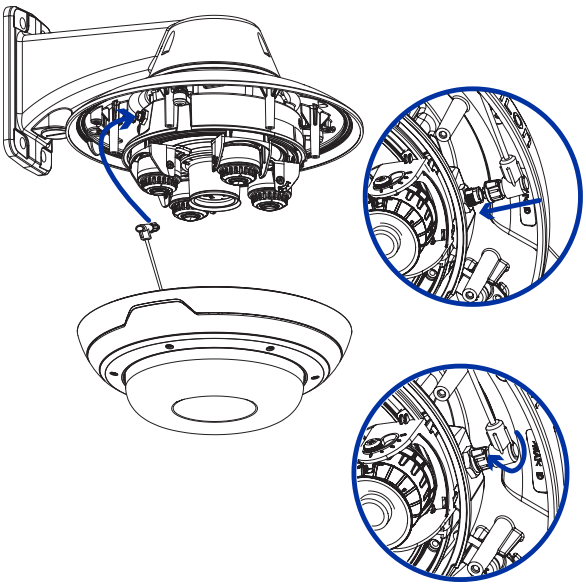

Installing the Pendant Mount Dome Cover

Note: Be careful not to scratch or touch the dome bubble. The resulting marks or fingerprints may affect the overall image quality. Keep the protective covers on the outside of the dome bubble until the installation is complete.

1. (Recommended) Attach a safety lanyard from the pendant mount adapter to the lanyard anchor on the dome cover to prevent the dome cover from falling.

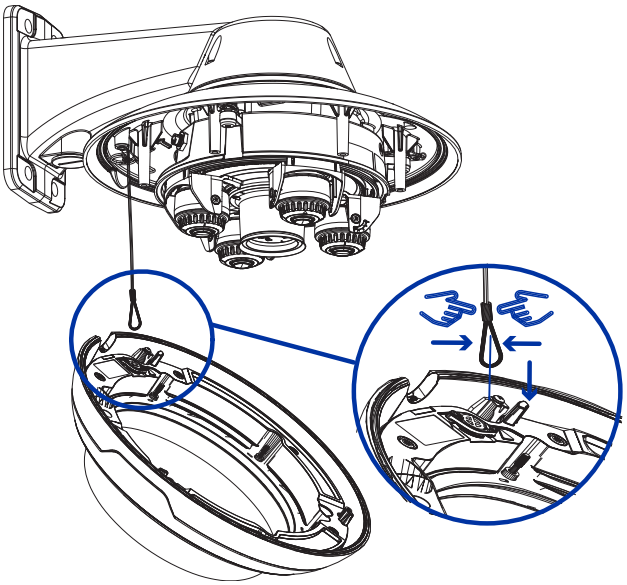

2. Align the notches on the dome cover with the release tab on the pendant mount adapter. The dome cover should be flush against the pendant mount adapter.

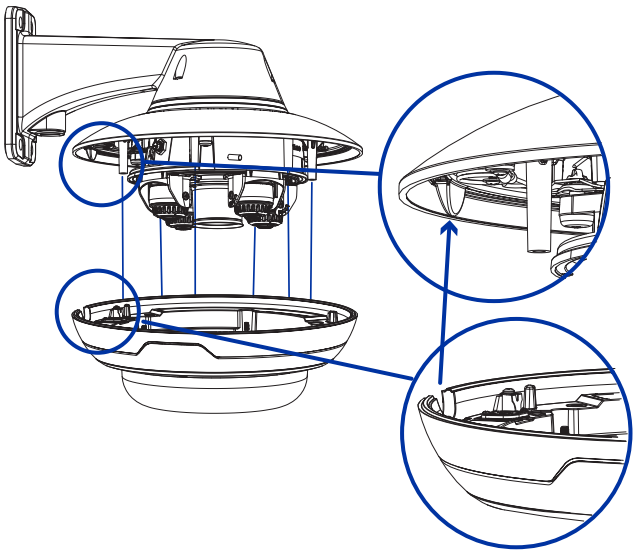

3. Tighten the setscrews to secure the dome cover in place.

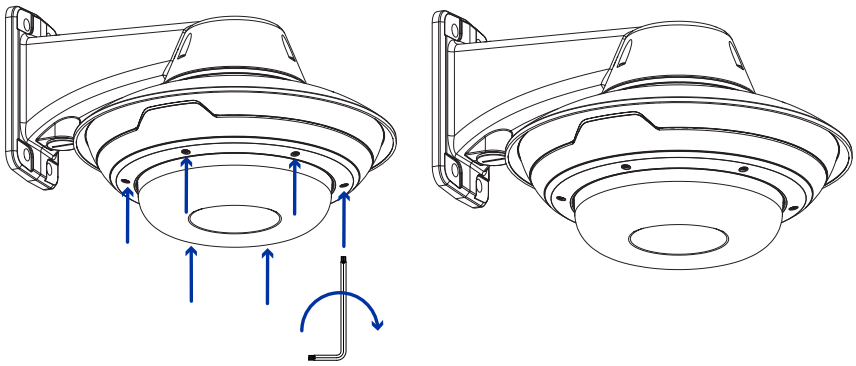

Surface Mount Installation

Camera Package Contents

The Sarix Multi Enhanced camera has a variety of different mounting, dome cover, camera and accessory options. The components for each Sarix Multi Enhanced camera will arrive in a camera package, a dome cover package, and a mounting adapter package.

Ensure the camera package contains the following:

- Pelco Sarix Multi Enhanced Camera module. A 3- or 4-sensor camera module with 3 MP, 5 MP, or 4K (8 MP) resolution per sensor.
- Audio, external power, and I/O pigtail cable connector
- RJ45 CAT5E plugs (x2)
- RJ45 connector waterproof gland

Ensure the Surface mount adapter package contains the following:

- Surface mount adapter (IMD1-SMT)
- Installation instructions sheet
- Mounting template sticker

Ensure the dome cover package contains the following:

- Clear or smoked dome bubble and cover (IMD1-SPLD1 or IMD1-SPLD0)

If you are installing the camera with the optional IR illuminator, ensure the package includes the following:

- IR illuminator ring (IMD1-IR)

Surface Mount Installation Steps

Complete the following sections to install the device.

Installing the Surface Mount Adapter

Follow this procedure to route camera cables and install the surface mount adapter (IMD1-SMT) to the mounting surface.

1. Determine where the cables will enter the camera. The surface mount adapter has two cable entry holes: one on the side and one on the bottom of the mounting adapter.
   - Use the supplied closure plug to fill the unused cable entry hole.
   - When installing outdoors, wrap the threads of the closure plug with plumber's tape to create a watertight seal.

   Note: Only use vandal-resistant conduits to route cables into the mounting adapter. Vandal-resistant conduits will protect the cables and compliment the camera's vandal-resistant design.

   Note: When installing the Sarix Multi Enhanced surface mount camera outdoors, ensure the conduit and its fitting are designed for outdoor use and have a suitable IP rating. Always apply silicone sealant to seal the cable entry hole and prevent excessive moisture from entering the camera.

2. If you are using the rear cable entry hole:

a. Use the supplied mounting template to determine the cable entry location. Drill a hole in the mounting surface and route the conduit and cables through the hole. Install the conduit and its fitting as instructed by the manufacturer.

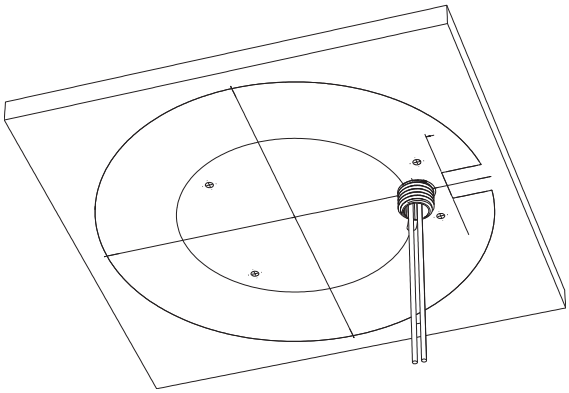

b. Drill 4 mounting holes as marked on the mounting template.

c. Pull the cables through the rear cable entry hole on the surface mount adapter.

d. Use a screwdriver to secure the mounting adapter to the mounting surface with the 4 mounting screws.

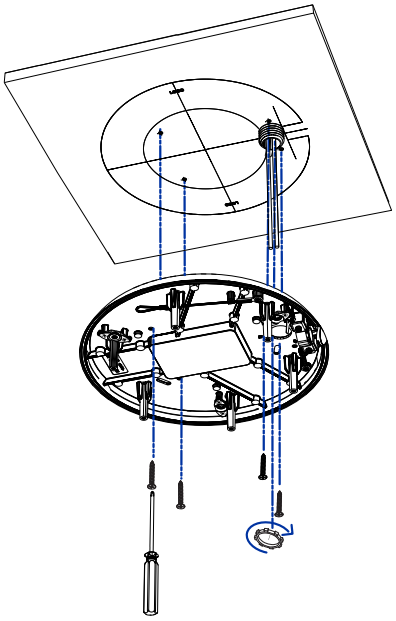

e. Secure the conduit to the surface mount adapter with the lock nut.

Note: If installing outdoors, apply silicone sealant around the edge of the surface mount adapter that is connected to the mounting surface.

3. If you are using the side cable entry hole:

Note: If you are installing the camera outdoors on a vertical surface, the side cable entry hole and conduit connector must face downwards to prevent excessive moisture from entering the camera.

a. Use the supplied mounting template to determine the cable entry location. Run the cables and conduit to the side opening as marked on the mounting template. Install the conduit and its fitting as instructed by the manufacturer.

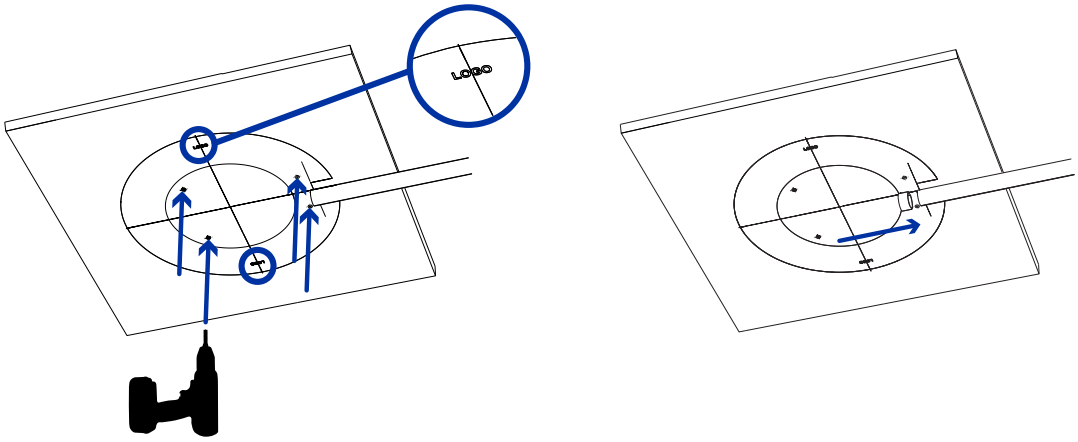

b. Drill 4 mounting holes as marked on the mounting template.
c. Pull the cables through the side cable entry hole on the surface mount adapter.
d. Use a screwdriver to secure the mounting adapter to the mounting surface with the 4 mounting screws.

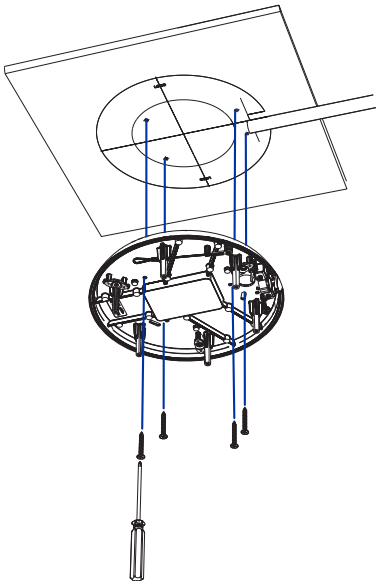

e. Secure the conduit to the surface mount adapter with the conduit clamp.

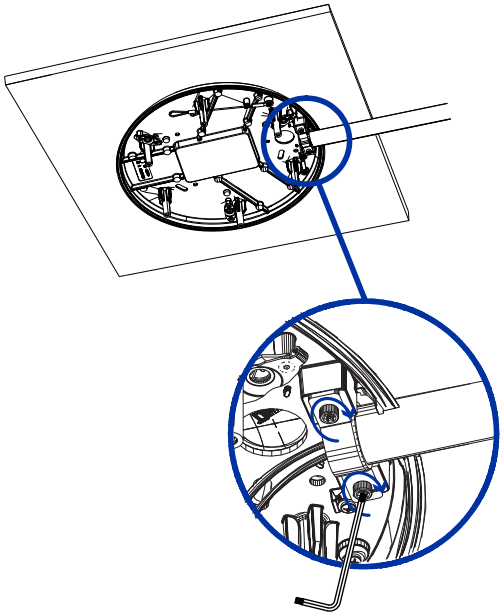

Note: If installing outdoors, apply silicone sealant around the edge of the surface mount adapter that is connected to the mounting surface.

Connecting Cables

Refer to the diagrams in the Overview section for the location of the different connectors.

To connect the cables required for proper operation, complete the following:

1. Feed the network cable through the gland cap and cable gland. Crimp the RJ-45 cable connector (supplied) to the end of your network cable.

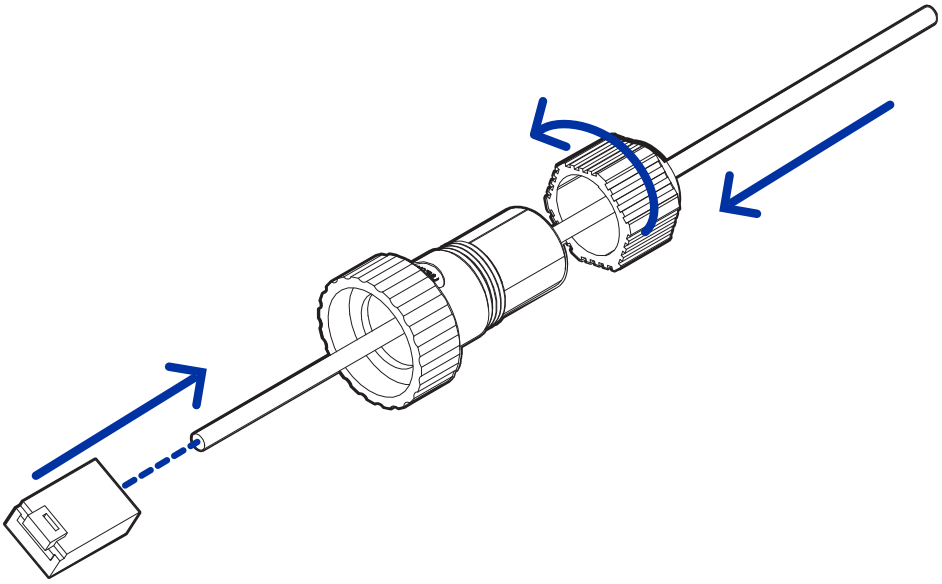

The network cable connection can also be used to supply power to the camera using Power over Ethernet (PoE). If using PoE, connect a PoE compliant injector or switch to the Ethernet network cable with the output rated:

- With IR Ring: 60W PoE mid-span injector (POE60U-1BTE). Alternatively, connect to a Cisco® UPoE capable switch, supporting 60W over 4 pairs. Note that the Cisco switch must be configured with the *Force Four Pair* option enabled.
- Without IR Ring: Power over Ethernet (PoE) Plus, PD-9001GR/AT/AC-MSI, IEEE 802.3at Class 4 — Connect a PoE Plus compliant injector or switch (e.g. POE430-AT, POE1236-AT, or POE2436-AT).

Note: When on UPoE and without an IR ring, the Sarix Multi Pro will continue to request 60W power on startup, as the IR ring is a hot-pluggable add-on accessory. If the IR ring accessory will never be used, the recommendation is to limit the available power to PoE plus equivalent on the Cisco switch settings.

2. Connect the following optional connections to the supplied pigtail I/O connector. See *Connecting to Power, Audio, and External Devices* for more information on the different connections.

   a. If external input or output devices are part of the installation (for example: door contacts, relays, etc.), wire those devices to the pigtail connector.

   b. If an external microphone or speaker is required, connect the devices to the pigtail connector.

   c. If external power is required, connect an external "Class 2" or "LPS" or "Limited Power Source" to the pigtail connector with output rated:

- With IR Ring: 24 VAC ± 10%, 74 VA minimum, or 24 VDC ± 10%, 52 W minimum.
- Without IR Ring: 24 VAC ± 10%, 37 VA minimum, or 24 VDC ± 10%, 26 W minimum.

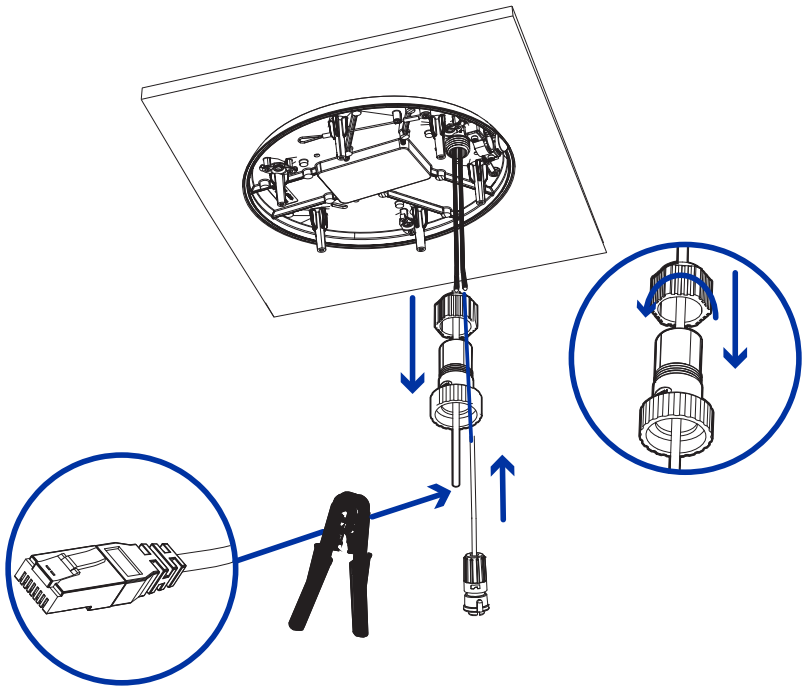

3. Connect the safety lanyard from the mounting adapter to the lanyard anchor on the camera base.

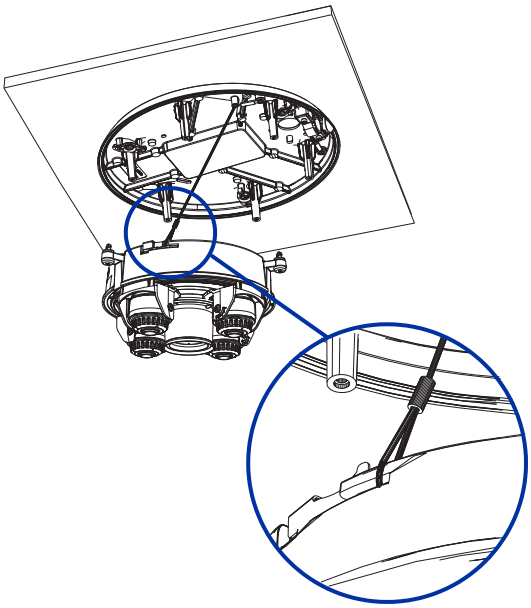

4. Tighten the cable glands around the cables.

5. Remove the connector covers from the external power/audio/digital I/O connector and the optional IR illuminator connector.

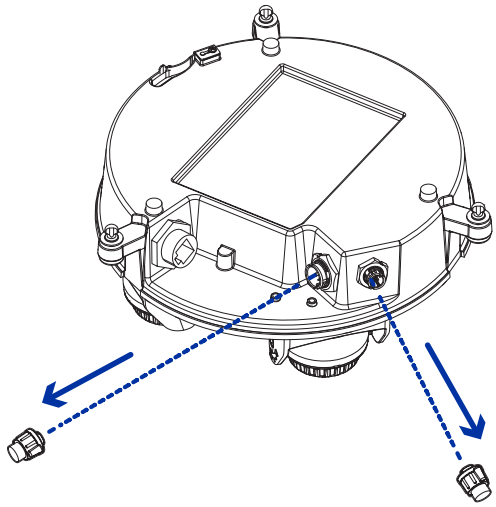

6. Connect the network cable to the Ethernet port (1) and the external power/audio/digital I/O cable to its connector (2). Secure the connections by turning them clockwise (3). For information about using redundant power with seamless failover, refer to *Seamless Failover*.

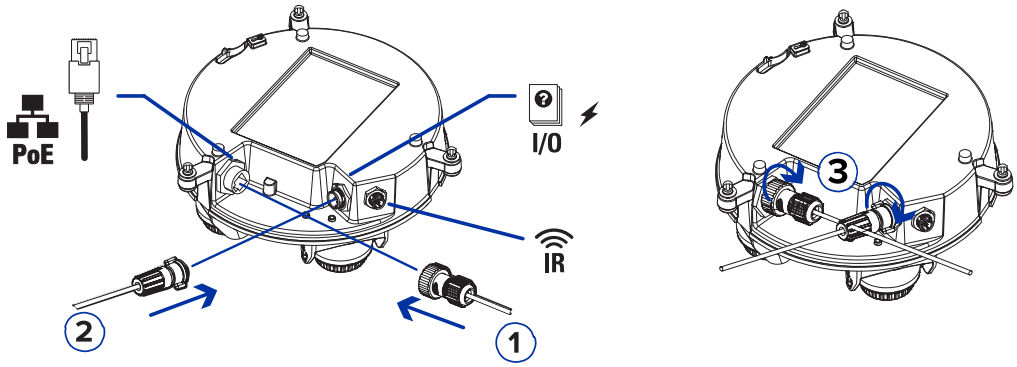

The Link LED will turn on once a network link has been established.

7. Check that the Connection Status LED indicator indicates the correct state. For more information, see *Connection Status LED Indicator*.

(Optional) Configuring microSD Card Storage

To use the camera's SD card storage feature, you must insert one or two microSD cards into the card slot.

It is recommended that the microSD card have a write speed of class 10 or better. If the microSD card does not meet the recommended write speed, the recording performance may suffer and result in the loss of frames or footage.

1. Insert one or two microSD card into the camera.

   Note: You can now use one or both SD card slots. The camera will record video to both SD card slots simultaneously if two SD cards are inserted. The total storage capacity of the system is the combined storage capacity of each of the individual cards.

   Insertion of the microSD card(s) is spring loaded. Do not force the microSD card(s) into the camera or you may damage the card and the camera.

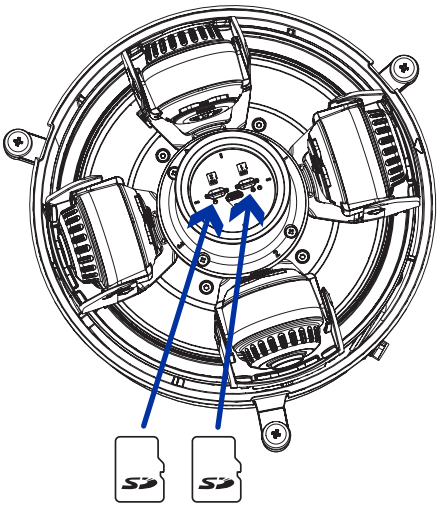

2. Access the camera's web interface to enable the onboard storage feature. For more information, see the *Pelco Sarix Multi Enhanced Camera Operations Manual*.

Initializing a Camera Username and Password

Important: You must create a user with administrator privileges before the camera is operational.

If the camera is in the factory default state, you will be redirected to the *New User* page to create an administrator user:

1. Enter a new *User Name* or keep the default administrator name.
2. Enter a new *Password* for the user. It is recommended to use a secure and complex password.
3. Confirm the new password.
4. For the first user, *Administrator* must be selected in the *Security Group* drop-down menu.
5. Click **Apply**. After creating the user, you will be asked to login.

Tip: If you are connecting your Pelco camera to a 3rd party VMS, you will need to set up the first user through the camera's Web Interface or Camera Configuration Tool before you connect to the 3rd party VMS.

Assigning an IP Address

The device automatically obtains an IP address when it is connected to a network.

Note: If the device cannot obtain an IP address from a DHCP server, it will use Zero Configuration Networking (Zeroconf) to choose an IP address. When set using Zeroconf, the IP address is in the 169.254.0.0/16 subnet.

The IP address settings can be changed using one of the following methods:

- Device's web browser interface: http://*<camera IP address>/*.
- Network Video Management software application (for example, the Pelco VideoXpert software).
- ARP/Ping method. For more information, see *Setting the IP Address Using the ARP/Ping Method*.

Accessing the Live Video Stream

Live video stream can be viewed using one of the following methods:

- Web browser interface: http://*< camera IP address>/*.
- Network Video Management software application (for example, the Pelco VideoXpert software).

Installing the Sarix Multi Enhanced Camera Base to a Surface Mount

After the cable connections have been made, mount the Sarix Multi Enhanced camera base into the surface mount adapter.

1. Inspect the PoE switch setting in the camera base to verify it is set correctly for your installation. The "B" position is the default position that is compatible with the 802.3bt standard. The "A" position should be used for legacy HPoE injectors PD-9501G, PD-9501GR, and PD-9601G. For more information, see the *Overview* section.
2. (Recommended) Attach a safety lanyard from the surface mount adapter to the lanyard anchor on the camera base to prevent the camera from falling. See *Connecting Cables*.
3. Push the camera base into the surface mount adapter so that the 3 setscrews in the camera base align with the screw holes in the surface mount adapter.

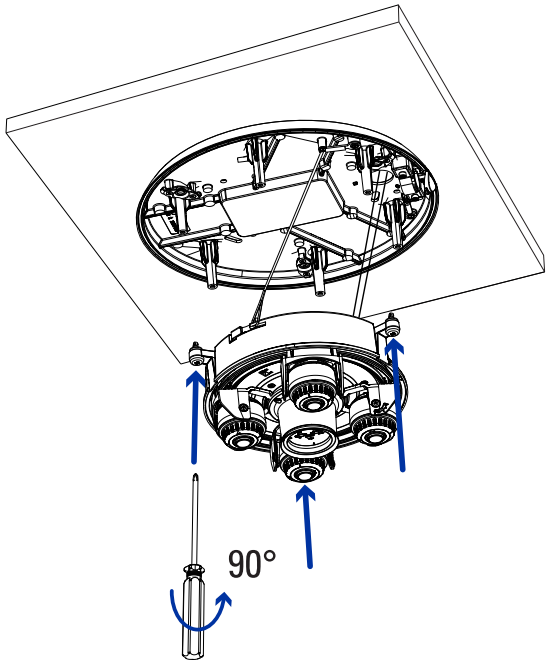

4. Use a screwdriver to turn the 3 setscrews clockwise by 90° and secure the camera to the surface mount adapter.

Aiming the Sarix Multi Enhanced Camera

Reference the camera's live stream as you aim the camera.

1. To aim the camera, adjust each of the available camera heads as required:

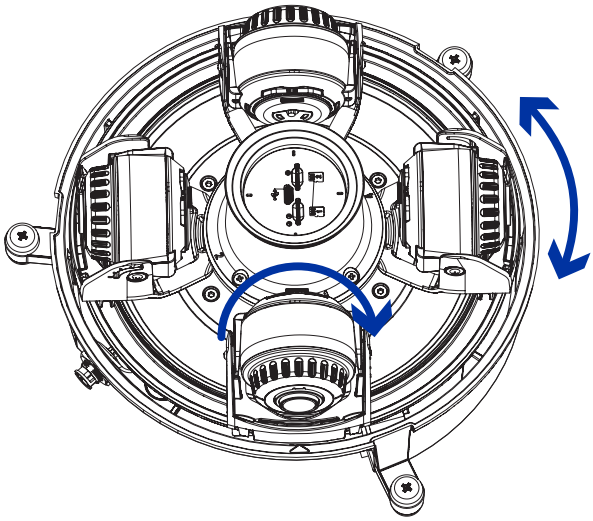

2. In the camera web browser interface, adjust the camera’s Image and Display settings to achieve the desired image parameters and position.

(Optional) Installing the IR Illuminator Ring

Note: The optional IR illuminator ring (IMD1-IR) is compatible with the pendant and surface mount installations of the Sarix Multi Enhanced camera. The hot-pluggable IR illuminator ring must be mounted in an outdoor dome cover (IMD1-SPLD1 or IMD1-SPLD0).

After the camera has been mounted into the mounting adapter, install the IR illuminator ring with the Sarix Multi Enhanced camera base:

1. Mount the IR illuminator ring into the dome cover (IMD1-SPLD1 or IMD1-SPLD0):
   a. Insert the IR ring into the dome cover so that the orange arrow on the IR ring aligns with the orange tab on the dome cover.

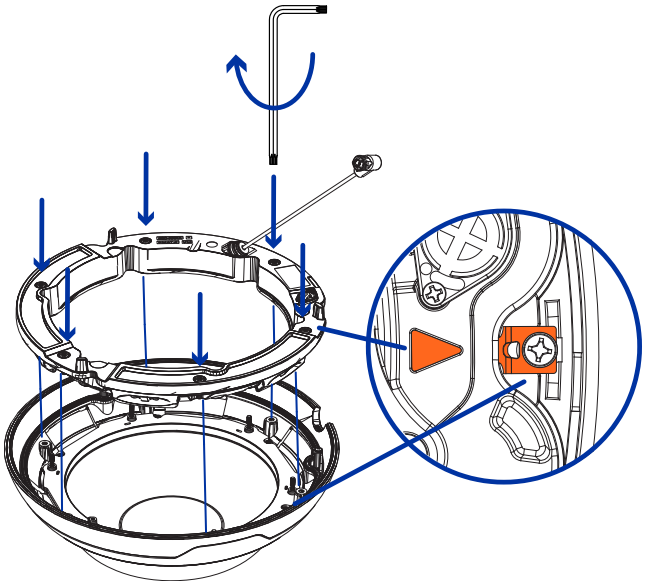

b. Use a screwdriver to secure the IR ring to the dome cover by tightening the 6 setscrews.

2. (Recommended) Attach a safety lanyard from the mounted camera to the lanyard anchor on the dome cover to prevent the cover from falling. See *Installing the Surface Mount Dome Cover*.
3. Push the IR ring cable onto IR connector on the camera base and turn the connector clockwise to secure the connection.

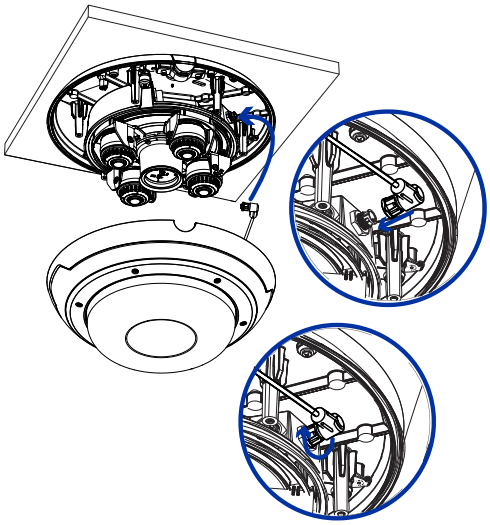

Installing the Surface Mount Dome Cover

Note: Be careful not to scratch or touch the dome bubble. The resulting marks or fingerprints may affect the overall image quality. Keep the protective covers on the outside of the dome bubble until the installation is complete.

1. (Recommended) Attach a safety lanyard from the surface mount adapter to the lanyard anchor on the dome cover to prevent the dome cover from falling.

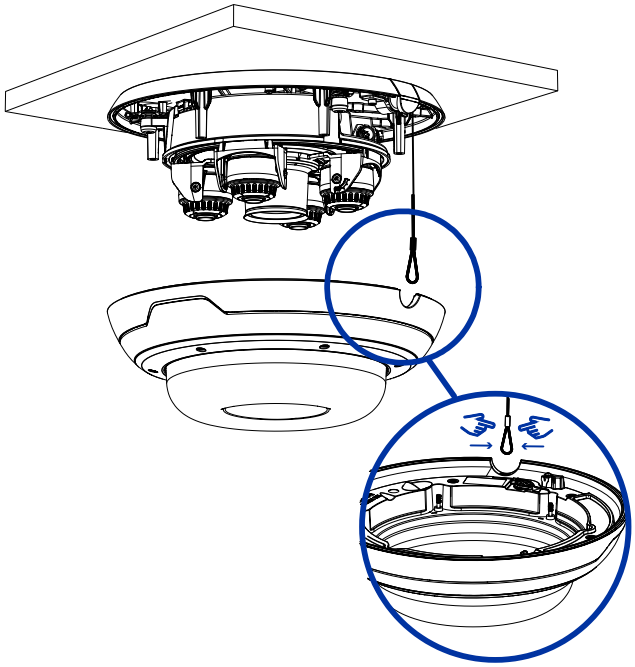

2. Align the inverted tab on the dome cover with the tab on the surface mount adapter. The dome cover should be flush against the surface mount adapter.

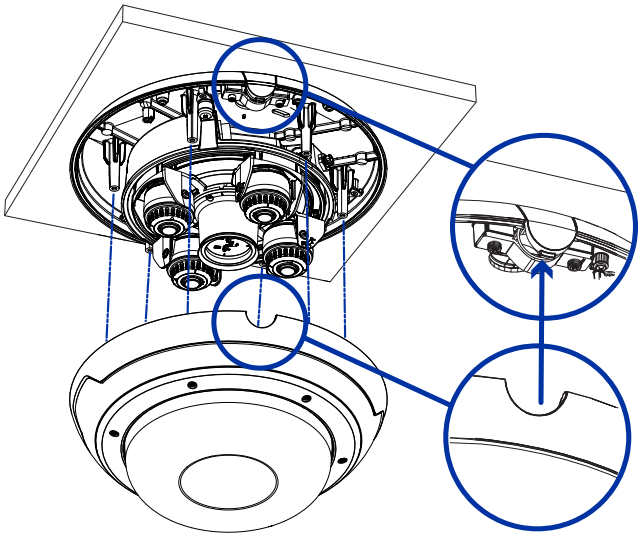

3. Tighten the setscrews to secure the dome cover in place.

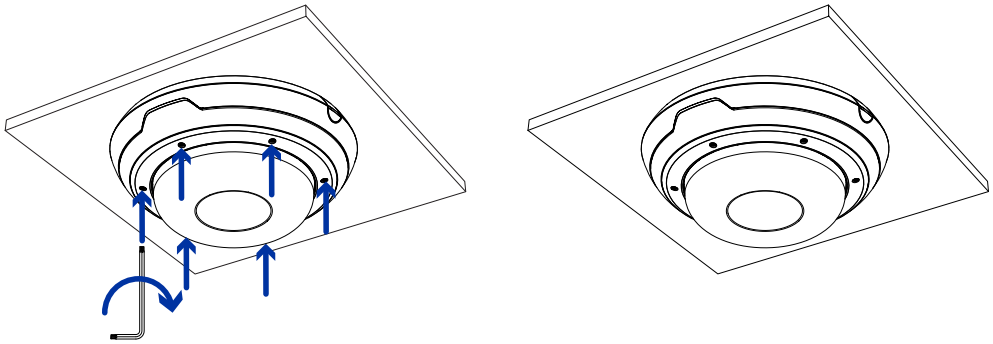

In-Ceiling Mount Installation

Camera Package Contents

The Sarix Multi Enhanced camera has a variety of different mounting, dome cover, camera and accessory options. The components for each Sarix Multi Enhanced camera will arrive in a camera package, a dome cover package, a mounting adapter package, and an optional metal ceiling panel package (for in-ceiling cameras).

Ensure the camera package contains the following:

- Pelco Sarix Multi Enhanced Camera module. A 3- or 4-sensor camera module with 3 MP, 5 MP, or 4K (8 MP) resolution per sensor.
- Audio, external power, and I/O pigtail cable connector
- RJ45 CAT5E plugs (x2)
- RJ45 connector waterproof gland

Ensure the In-Ceiling mount adapter package contains the following:

- In-ceiling mount adapter (IMD1-INC)
- Cable entry cover
- Installation instructions sheet
- Mounting template sticker

Ensure the dome cover package contains the following:

- Clear or smoked dome bubble and cover (IMD1-SPLD1 or IMD1-SPLD0)

If you are installing the in-ceiling camera with the metal ceiling panel, ensure the package includes the following:

- Metal ceiling panel (CLPNL-1001)

In-Ceiling Mount Installation Steps

Complete the following sections to install the device.

Preparing the Camera for In-Ceiling Installation

Before starting the installation, prepare the in-ceiling adapter for installation:

1. If you are planning to use onboard storage, insert a microSD card into the SD card slot on the Sarix Multi Enhanced camera. For more information, see *(Optional) Configuring microSD Card Storage*.
2. Use a screwdriver to push each of the clamps into their top positions and ensure their springs are fully compressed. In one smooth motion, push each clamp up (a), clockwise (b), up again (c), and

then counter-clockwise (d).

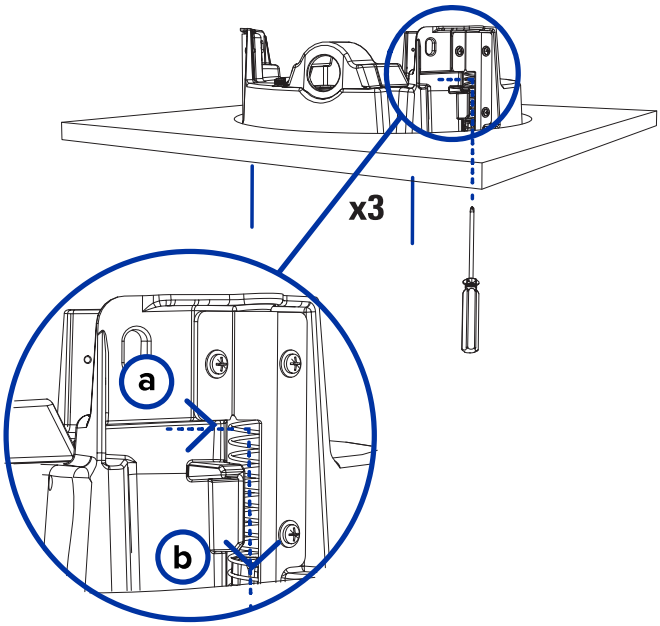

(Optional) Cutting the Mounting Hole for the In-Ceiling Mount Adapter

This procedure is not required if you are planning to install the camera with a metal ceiling panel (CLPNL-1001).

1. Use the mounting template to cut a hole in the mounting surface.

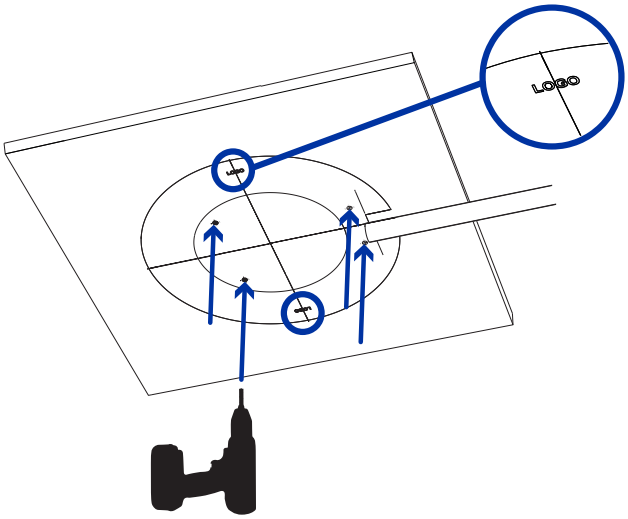

2. Remove the mounting template and pull the required cables through the mounting hole. If you are using a conduit pipe to route the cables, see *(Optional) Attaching the Conduit Cable Entry Cover for Plenum Installations*.

(Optional) Attaching the Conduit Cable Entry Cover for Plenum Installations

If you are installing the Sarix Multi Enhanced camera into a plenum space, use a conduit pipe and the cable entry cover to route the cables through the in-ceiling adapter.

1. Route the required cables through a conduit pipe at the installation location.
2. Attach a conduit connector to the cable entry cover. Install the conduit and its fitting as instructed by the manufacturer. Make sure the conduit is securely fastened to the cable entry cover.

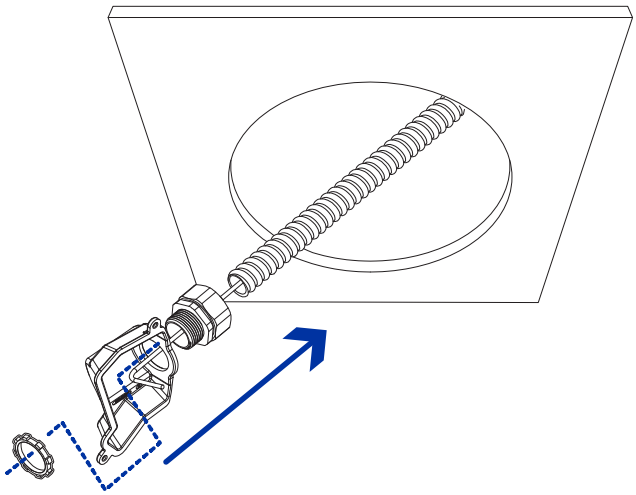

3. Pull the required cables through the conduit and cable entry cover, then through the cable entry hole in the in-ceiling adapter (a). Fasten the cable entry cover over the cable entry hole in the in-ceiling adapter using the provided setscrews (b).

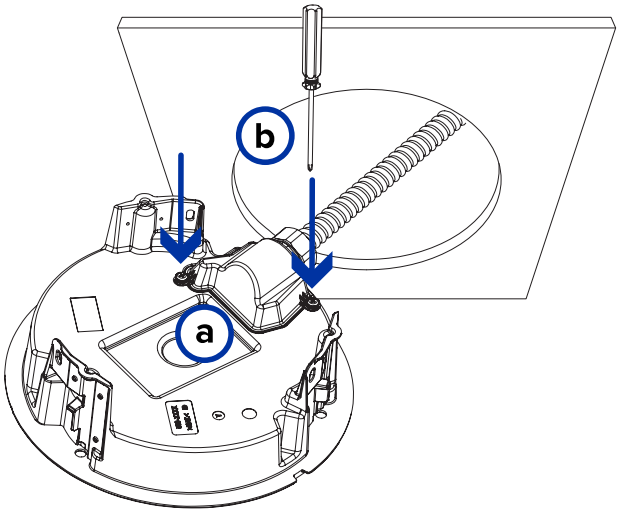

Installing the In-Ceiling Mounting Adapter

Use the following procedure to mount the in-ceiling adapter into a plenum space or the metal ceiling panel (CLPNL-1001).

1. After routing the cables through the in-ceiling adapter, push the adapter into the hole in the mounting surface.

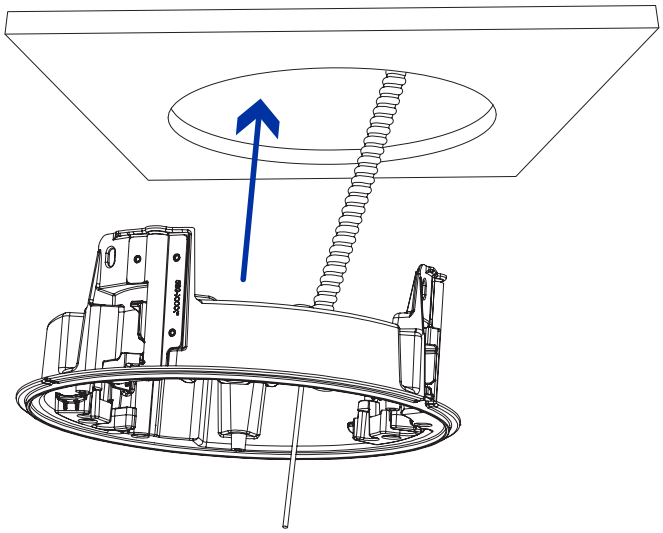

2. Use a screwdriver to lower each of the clamps from their top positions and secure the adapter to the mounting surface. In one smooth motion, move each clamp clockwise (a), and then down to its secure position (b).

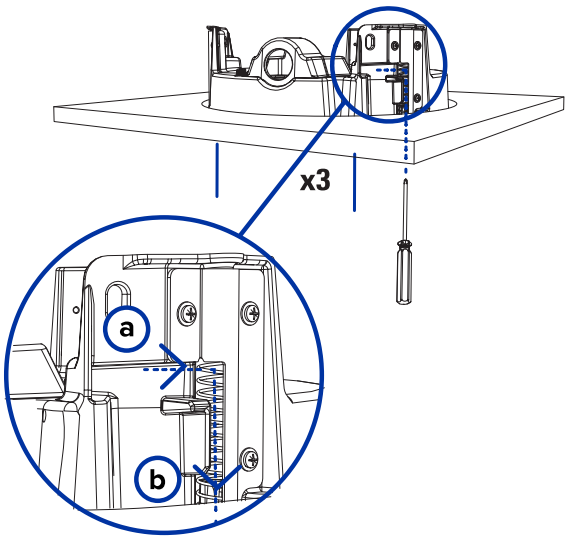

Connecting Cables

Refer to the diagrams in the Overview section for the location of the different connectors.

To connect the cables required for proper operation, complete the following:

1. Crimp the RJ-45 cable connector (supplied) to the end of your network cable.

   The network cable connection can also be used to supply power to the camera using Power over Ethernet (PoE). If using PoE, connect a PoE compliant injector or switch to the Ethernet network cable with the output rated:

   - 25.5 W PoE+, IEEE802.3at Type 2 PoE+.

2. Connect the following optional connections to the supplied pigtail I/O connector. See *Connecting to Power, Audio, and External Devices* for more information on the different connections.

   a. If external input or output devices are part of the installation (for example: door contacts, relays, etc.), wire those devices to the pigtail connector.

   b. If an external microphone or speaker is required, connect the devices to the pigtail connector.

   c. If external power is required, connect an external "Class 2" or "LPS" or "Limited Power Source" to the pigtail connector with output rated:

      - 24 VAC ± 10%, 37 VA minimum, or 24 VDC ± 10%, 26 W minimum.

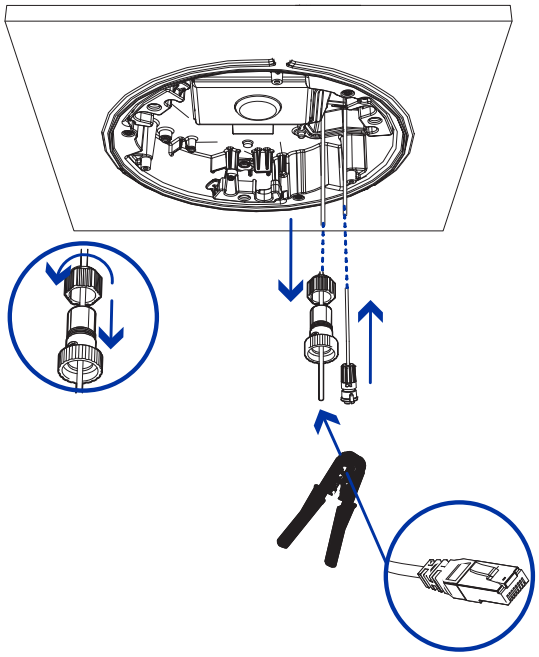

3. Connect the safety lanyard from the mounting adapter to the lanyard anchor on the camera base.

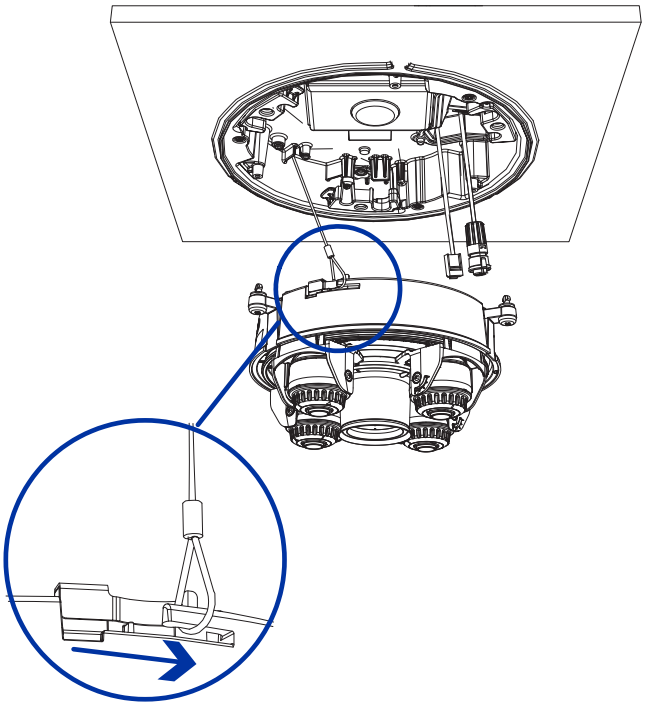

4. Tighten the cable glands around the cables.
5. Remove the connector covers from the external power/audio/digital I/O connector.

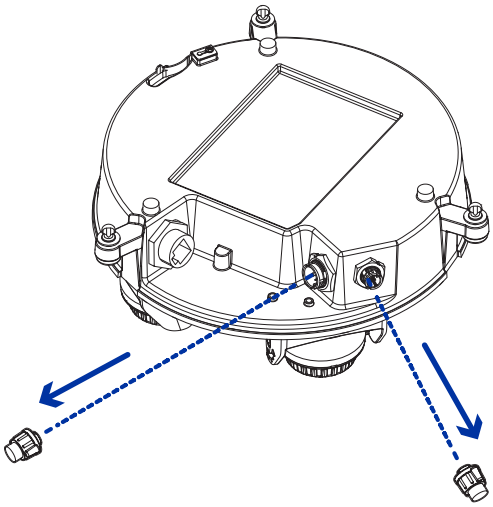

6. Connect the network cable to the Ethernet port (1) and the external power/audio/digital I/O cable to its connector (2). Secure the connections by turning them clockwise (3). For information about using redundant power with seamless failover, refer to *Seamless Failover*.

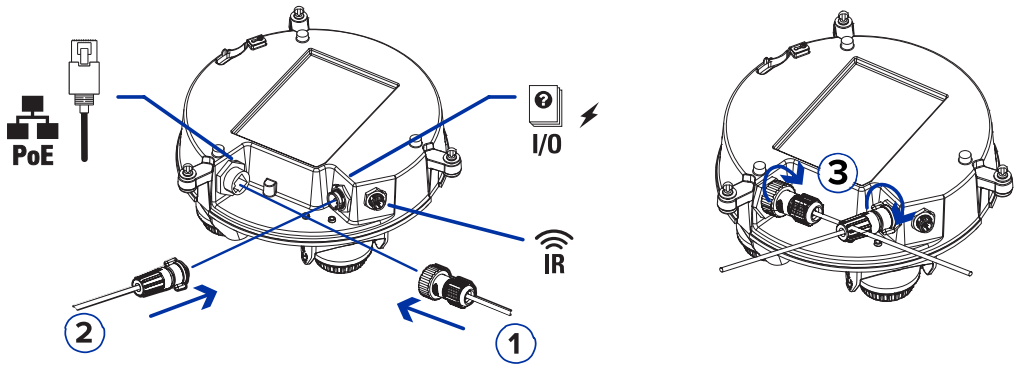

The Link LED will turn on once a network link has been established.

7. Check that the Connection Status LED indicator indicates the correct state. For more information, see *Connection Status LED Indicator*.

(Optional) Configuring microSD Card Storage

To use the camera's SD card storage feature, you must insert one or two microSD cards into the card slot.

It is recommended that the microSD card have a write speed of class 10 or better. If the microSD card does not meet the recommended write speed, the recording performance may suffer and result in the loss of frames or footage.

1. Insert one or two microSD card into the camera.

   Note: You can now use one or both SD card slots. The camera will record video to both SD card slots simultaneously if two SD cards are inserted. The total storage capacity of the system is the combined storage capacity of each of the individual cards.

   Insertion of the microSD card(s) is spring loaded. Do not force the microSD card(s) into the camera or you may damage the card and the camera.

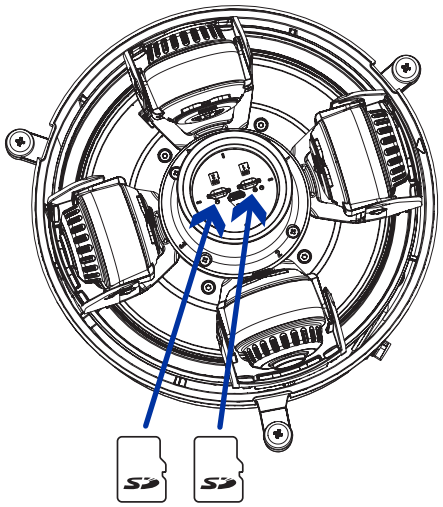

2. Access the camera's web interface to enable the onboard storage feature. For more information, see the *Pelco Sarix Multi Enhanced Camera Operations Manual*.

Initializing a Camera Username and Password

Important: You must create a user with administrator privileges before the camera is operational.

If the camera is in the factory default state, you will be redirected to the *New User* page to create an administrator user:

1. Enter a new *User Name* or keep the default administrator name.
2. Enter a new *Password* for the user. It is recommended to use a secure and complex password.
3. Confirm the new password.
4. For the first user, *Administrator* must be selected in the *Security Group* drop-down menu.
5. Click **Apply**. After creating the user, you will be asked to login.

Tip: If you are connecting your Pelco camera to a 3rd party VMS, you will need to set up the first user through the camera's Web Interface or Camera Configuration Tool before you connect to the 3rd party VMS.

Assigning an IP Address

The device automatically obtains an IP address when it is connected to a network.

Note: If the device cannot obtain an IP address from a DHCP server, it will use Zero Configuration Networking (Zeroconf) to choose an IP address. When set using Zeroconf, the IP address is in the 169.254.0.0/16 subnet.

The IP address settings can be changed using one of the following methods:

- Device's web browser interface: http://*<camera IP address>/*.
- Network Video Management software application (for example, the Pelco VideoXpert software).
- ARP/Ping method. For more information, see *Setting the IP Address Using the ARP/Ping Method*.

Accessing the Live Video Stream

Live video stream can be viewed using one of the following methods:

- Web browser interface: http://*< camera IP address>/*.
- Network Video Management software application (for example, the Pelco VideoXpert software).

Installing the Sarix Multi Enhanced Camera Base to an In-Ceiling Mount

After the cable connections have been made, mount the Sarix Multi Enhanced camera base into the in-ceiling mount adapter.

1. Inspect the PoE switch setting in the camera base to verify it is set correctly for your installation. The "B" position is the default position that is compatible with the 802.3bt standard. The "A" position should be used for legacy HPoE injectors PD-9501G, PD-9501GR, and PD-9601G. For more information, see the *Overview* section.
2. (Recommended) Attach a safety lanyard from the in-ceiling mount adapter to the lanyard anchor on the camera base to prevent the camera from falling. See *Connecting Cables*.

3. Push the camera module into the in-ceiling mounting adapter so that the 3 setscrews pass through the 3 slots (a). In one smooth motion, push the camera module up through the 3 slots (a), twist clockwise (b), and push up again so the 3 setscrews are positioned at the 3 screw holes (c).

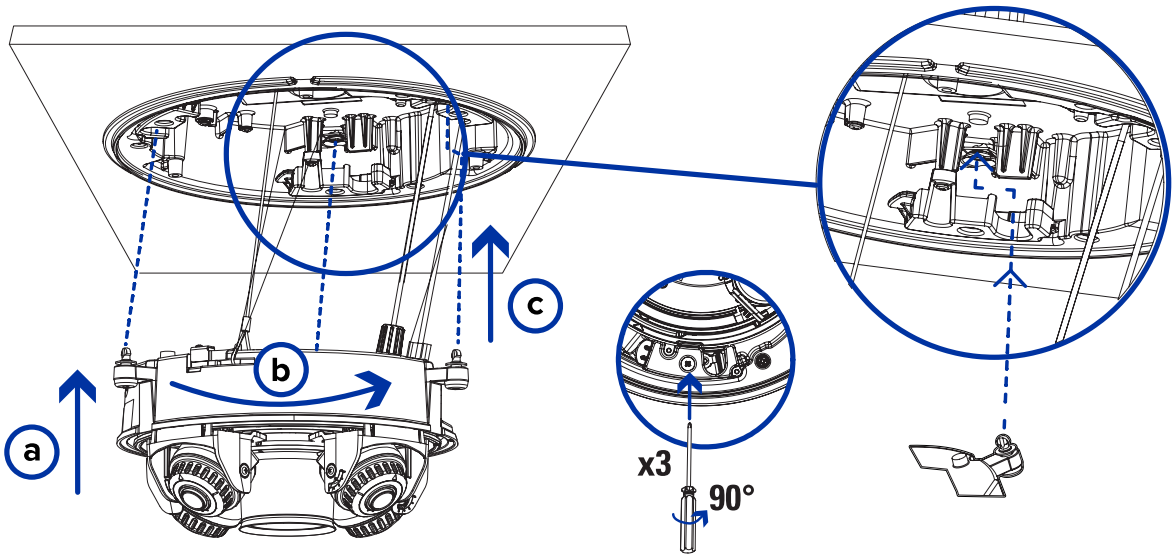

4. Use a screwdriver to turn the 3 setscrews clockwise by 90° and secure the camera into the in-ceiling mount adapter (d).

Aiming the Sarix Multi Enhanced Camera

Reference the camera's live stream as you aim the camera.

1. To aim the camera, adjust each of the available camera heads as required:

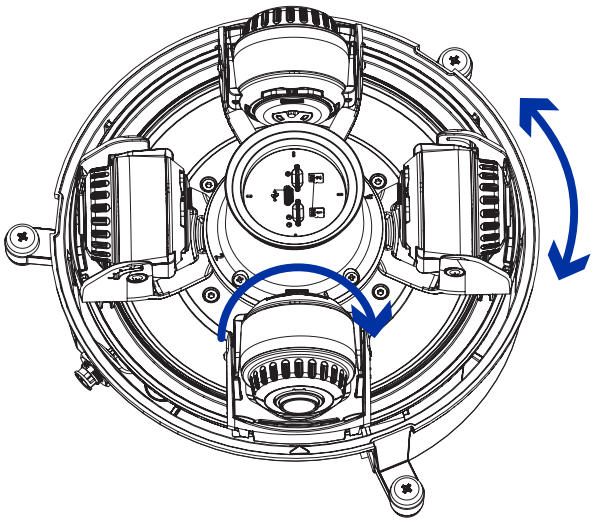

2. In the camera web browser interface, adjust the camera’s Image and Display settings to achieve the desired image parameters and position.

Installing the In-Ceiling Mount Dome Cover

Note: Be careful not to scratch or touch the dome bubble. The resulting marks or fingerprints may affect the overall image quality. Keep the protective covers on the outside of the dome bubble until the installation is complete.

1. (Recommended) Attach a safety lanyard from the in-ceiling mount adapter to the lanyard anchor on the dome cover to prevent the cover from falling.

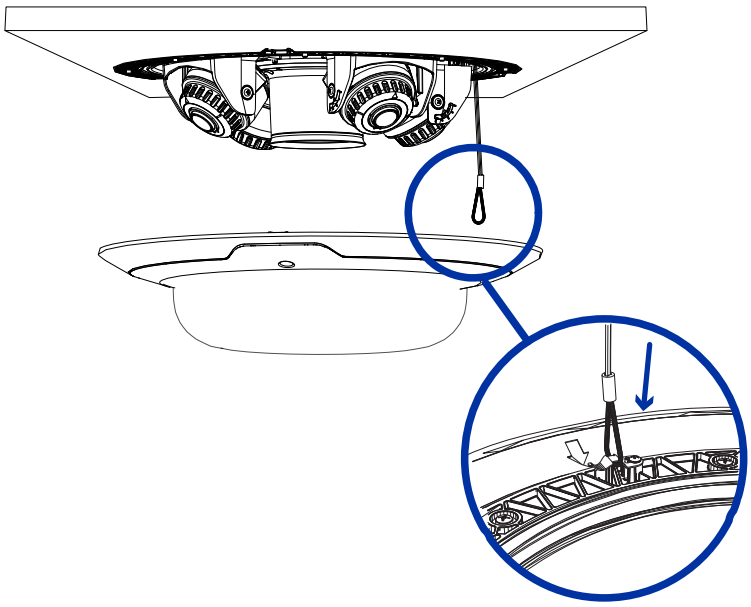

2. Align the notches on the dome cover with the release tab on the in-ceiling mount adapter. The dome cover should be flush against the mounting surface.

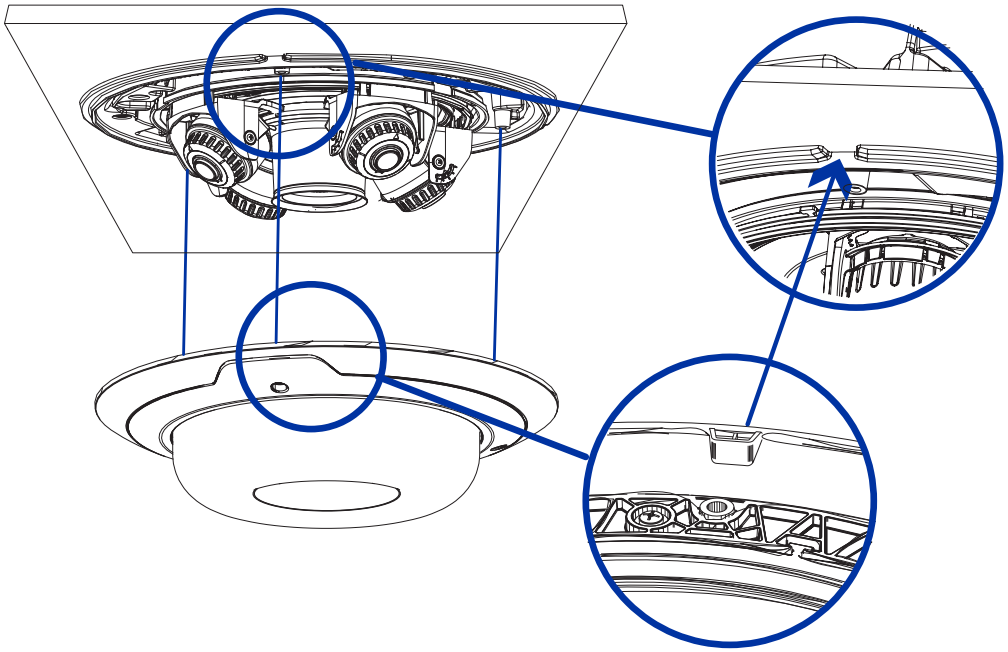

3. Tighten the setscrews to secure the dome cover in place.

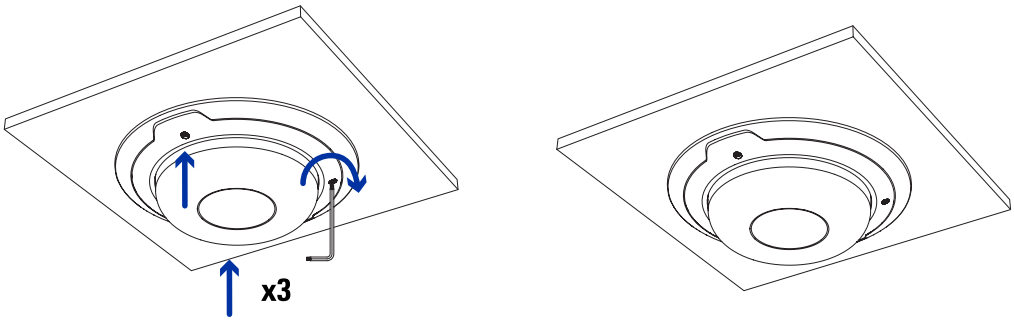

For More Information

Additional information about setting up and using the device is available in the following guide:

- Sarix Multi Enhanced available on the Pelco website: www.pelco.com.

Cable Connections

Connecting to Power, Audio, and External Devices

If PoE is not available, the camera may be powered through the auxiliary power cable using either 24 V DC or 24 V AC. The power consumption information is listed in the product specifications.

To power the camera, connect the two power wires to the brown and blue auxiliary power wires. The connection can be made with either polarity.

This product is intended to be supplied by a UL Listed Power Unit marked “Class 2” or “LPS” or “Limited Power Source” with output rated:

With IR LEDs: 24 V AC ± 10%, 74 VA minimum, or 24 V DC ± 10%, 52 W minimum.

Without IR LEDs: 24 V AC ± 10%, 37 VA minimum, or 24 V DC ± 10%, 26 W minimum.

For more information on using PoE to power the camera, see *Connecting Cables*.

Pigtail Connector and Wires

Power supplies, audio devices, and external devices are connected to the camera through the power, audio, and I/O pigtail. The following diagram and table shows the I/O, audio, and power pigtail connector and wires:

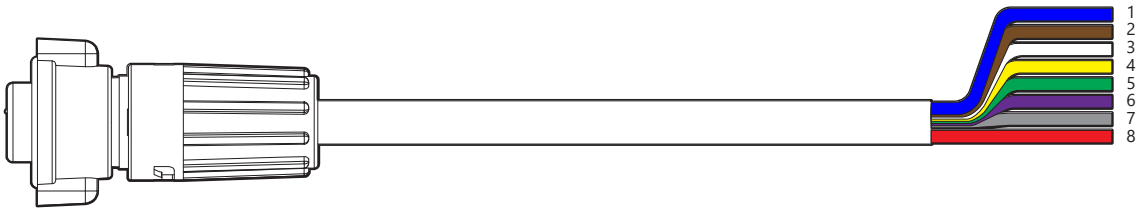

Wire	Color	Description
1	Blue	AUX1 Power, accepts either polarity
2	Brown	AUX2 Power, accepts either polarity
3	White	Audio IN
4	Yellow	Audio GND
5	Green	Audio OUT
6	Purple	Relay OUT
7	Gray	Relay GND
8	Red	Relay IN

Wiring Audio, I/O, and AUX Power

The connections for the I/O, audio, and power wires is shown in the following diagram:

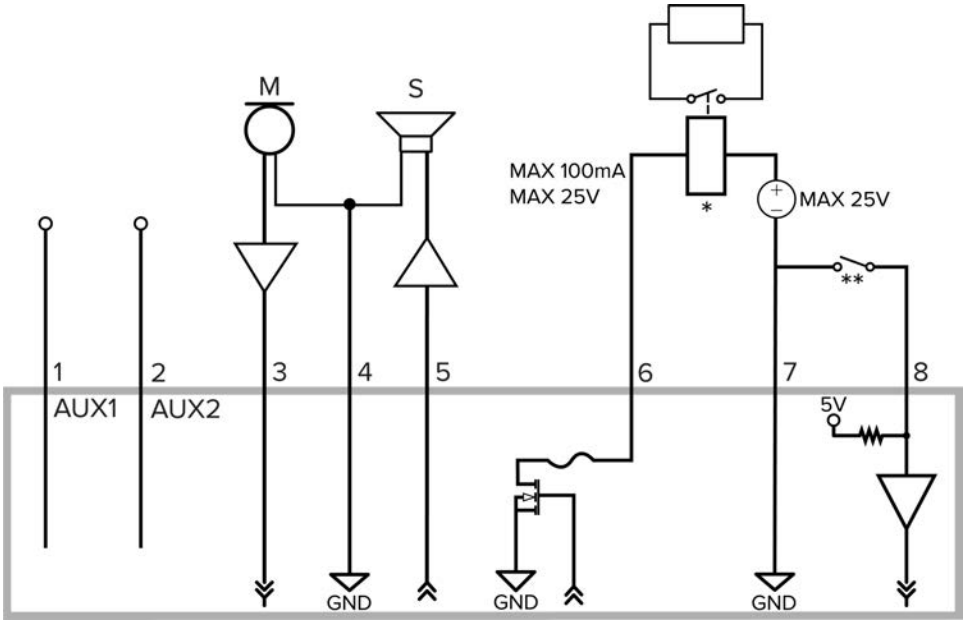

1. Brown — AUX1 Auxiliary Power wire, accepts either polarity
2. Blue — AUX2 Auxiliary Power wire, accepts either polarity
3. White — Audio Input (line level)
   An external power amplifier should be used when connecting speakers and microphones, as shown in the diagram.
4. Yellow — Audio Ground return
5. Green — Audio Output (line level)
6. Purple — Relay Output: When active, Output is internally connected with the Ground. Circuit is open when inactive. Maximum load is 25 V DC, 100 mA.
7. Gray — Relay Ground return
8. Red — Relay Input: To activate, connect the Input to the Ground wire. To deactivate, leave it disconnected or apply between 3-15 V.

- * — Relay
- ** — Switch
- M — Microphone
- S — Speaker
- AUX1 — Brown Auxiliary Power wire
- AUX2 — Blue Auxiliary Power wire

Seamless Failover

Redundant power with seamless failover is available on the Sarix Multi Enhanced camera. Seamless failover allows the camera to transition between PoE and auxiliary power sources without any interruption of camera operation or video recording. This is mainly useful if you want redundant power sources so that backup power will be available if one power source goes down.

Note: Seamless failover is only guaranteed when “full power” is available on the PoE port. Auxiliary (Aux) power is always assumed to be “full power,” meaning that there is enough power available for all possible camera functions. PoE, on the other hand, has many different power

classes and the product's functionality may depend on the PoE power class that is available.

For example, the Sarix Multi Enhanced camera requires a Class 6 (60W) PoE for full operation (IR ring connected and full IR output). However, it can also operate on Class 4 (30W) power with limited IR.

If a Class 3 PoE (15W) is connected, the camera will boot and display an "insufficient power" message. Therefore, if the camera is connected to a Class 4 PoE source while running on Aux power and using full IR power and the Aux power source is disconnected, the camera will most likely overload the PoE Power Over Ethernet (PSE) and reboot. However, if the camera is not using an IR ring and Aux power is removed, the Class 4 PoE power source would be adequate to guarantee seamless failover.

There is a downside to having seamless failover if you aren't using this functionality and are connecting your cameras to PoE-enabled switches while running the camera on Aux power. Since the PoE connection remains active when running on Aux power, if the camera is connected to a PoE-enabled port on a switch, the switch by default will allocate some of its overall power budget to that port.

For more information about cable connections, see *Connecting to Power, Audio, and External Devices*.

Connecting PoE and Auxiliary Power Simultaneously

To use the seamless failover feature, connect both PoE (1) and auxiliary power (2) as shown in the illustration below. See Connecting Cables for a Pendant Mount, Surface Mount, or In-Ceiling for more information.

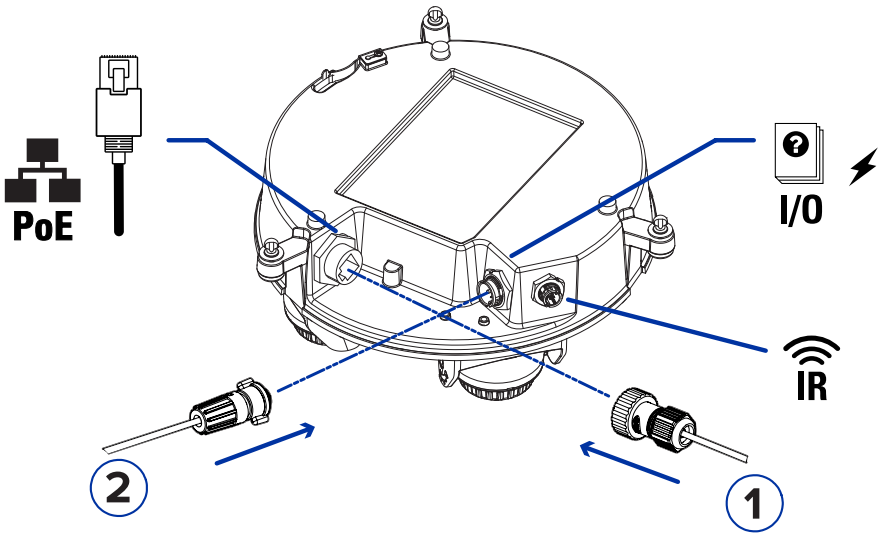

Power Source Priorities

The Sarix Multi Enhanced camera prioritizes auxiliary power so that if both power sources are connected, auxiliary power disables the PoE connection and provides power to the camera whenever it is present. The presence of auxiliary power does not disable or corrupt the PoE connection. If auxiliary power is interrupted, the camera will switch to drawing power from the PoE port without any interruption in operation.

The camera draws power from either auxiliary or PoE power, but never from both or shared. The only exception is the small amount of power that the PoE connection may require to stay connected. If the

priority power supply is removed and then reconnected, the camera will automatically switch back to drawing current from the priority power supply when it is available.

For more information, see *Connecting to Power, Audio, and External Devices*.

Seamless Failover for Different Operating Conditions

PoE Power Level	IR Ring	Seamless Failover Supported	Reboot When Aux Power Is Removed	Camera Power State After Aux Power Is Removed
60W/90W PoE	Yes or No	Yes	No	Full Power
30W PoE	No	Yes	No	Limited Power
30W PoE	Yes	No	Reboot likely unless IR is turned OFF when Aux power is removed (daytime, or disabled etc).	Limited Power
< 30W PoE	Yes or No	No	Reboot likely, but not guaranteed.	Insufficient Power

Power States

With the addition of seamless failover and two active power sources, more information will be provided in the About section of the camera WebUI. For more information, see the Sarix Multi Enhanced Operations Manual on pelco.com.

Examples of Power States	Definition
Aux + 60W PoE	Both Aux and PoE 60W are connected.
Aux + PoE+	Both Aux AND PoE+ are connected.
Aux + PoE	Both Aux and PoE are connected.

This allows you to see what power sources are connected and ensures that the PoE power source is adequate to take over the camera operation if the Aux power source is disconnected and you want to have seamless failover.

Focusing the Sarix Multi Enhanced Camera

Ensure this procedure is performed after the dome cover is installed so you can accommodate for the focus shift caused by the dome bubble.

Ensure you adjust the focus for each of the camera heads included with your Sarix Multi Enhanced camera.

In the camera web browser interface, use the camera's Image and Display settings to focus the camera.

1. Click **Auto Focus** to focus the lens.
2. Use the focus near and far buttons to manually adjust the focus.

Connection Status LED Indicator

Once connected to the network, the green Connection Status LED indicator will display the progress in connecting to the Network Video Management software.

The following table describes what the LED indicator shows:

Connection State	Connection Status LED Indicator	Description
Obtaining IP Address	One short flash every second	Attempting to obtain an IP address.
Discoverable	Two short flashes every second	Obtained an IP address but not connected to the Network Video Management software.
Upgrading Firmware	Two short flashes and one long flash every second	Updating the firmware.
Connected	On	Connected to the Network Video Management software. The default connected setting can be changed to Off using the camera's web user interface. For more information see the *Pelco Sarix Multi Pro Operations Guide*.

Troubleshooting Network Connections and LED Behavior

For any of the below LED behaviors, ensure that the camera is getting power and is using a good network cable before trying another solution.

LED Behavior	Suggested Solution
Green LED is off and amber is on	Perform a factory reset of the camera using the physical firmware revert button. Resetting through the camera's web interface will not produce the desired result.
Both LEDs are off and the camera is not connected or streaming video	Check the General setup page in the camera's web interface to ensure the LEDs are not disabled. If the LEDs are not disabled, perform a factory reset of the camera using the physical firmware revert button. Resetting through the camera's web interface will not produce the desired result.
Both LEDs are blinking several times at the same time, then pause and repeat the blinking	Perform a factory reset of the camera using the physical firmware revert button. Resetting through the camera's web interface will not produce the desired result.
A different LED blinking pattern than those described above	Perform a factory reset of the camera using the physical firmware revert button. Resetting through the camera's web interface will not produce the desired result.

Resetting to Factory Default Settings

If the device no longer functions as expected, you can choose to reset the device to its factory default settings.

Use the firmware revert button to reset the device. The firmware revert button is shown in the following diagram:

Note: Be careful not to scratch the dome bubble.

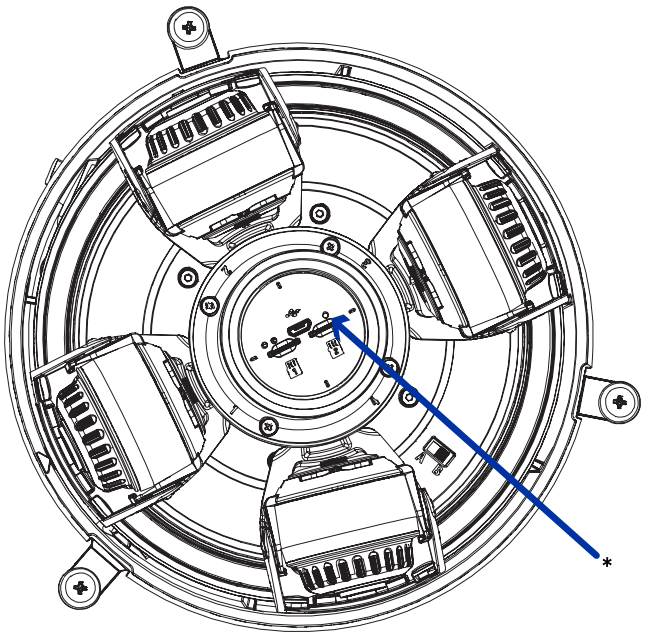

1. Ensure the camera is powered on.
2. Remove the dome cover.
3. Using a straightened paperclip or similar tool, gently press and hold the firmware revert button (*) for two seconds.
4. Re-install the dome cover.

Do not apply excessive force. Inserting the tool too far may damage the camera.

Setting the IP Address Using the ARP/Ping Method

Complete the following steps to configure the camera to use a specific IP address:

The ARP/Ping Method will not work if the **Disable setting static IP address through ARP/Ping method** checkbox is selected in the camera's web browser interface. For more information, see the *Pelco Sarix Multi Pro Camera*.

1. Locate and make note of the MAC Address (MAC) listed on the Serial Number Tag for reference.
2. Open a Command Prompt window and enter the following commands:
   a. `arp -s` *<New Camera IP Address>* *<Camera MAC Address>*
      For example: `arp -s 192.168.1.10 00-18-85-12-45-78`
   b. `ping -l 123 -t` *<New Camera IP Address>*
      For example: `ping -l 123 -t 192.168.1.10`
3. Reboot the camera.
4. Close the Command Prompt window when you see the following message:
   `Reply from <New Camera IP Address>: ...`

Cleaning

Dome Bubble

If the video image becomes blurry or smudged in areas, it may be because the dome bubble requires cleaning.

To clean the dome bubble:

- Use hand soap or a non-abrasive detergent to wash off dirt or fingerprints.
- Use a microfiber cloth or non-abrasive fabric to dry the dome bubble.

Important: Failure to use the recommended cleaning materials may result in a damaged or scratched dome bubble. A damaged dome bubble may negatively impact image quality and cause unwanted IR light reflecting into the lens.

Body

- Use a dry or lightly dampened cloth to clean the camera body.
- Do not use strong or abrasive detergents.

Limited Warranty and Technical Support

Pelco warranty terms for this product are provided at pelco.com.

Warranty service and technical support can be obtained by contacting Pelco Technical Support: pelco.com.

Pelco, Inc.
625 W. Alluvial Ave., Fresno, California 93711 United States
(800) 289-9100 Tel
(800) 289-9150 Fax
+1 (559) 292-1981 International Tel
+1 (559) 348-1120 International Fax
www.pelco.com

Pelco, the Pelco logo, and other trademarks associated with Pelco products referred to in this publication are trademarks of Pelco, Inc. or its affiliates. ONVIF and the ONVIF logo are trademarks of ONVIF Inc. All other product names and services are the property of their respective companies. Product specifications and availability are subject to change without notice.

© Copyright 2025, Pelco, Inc. All rights reserved.