ExSite® Pro Bullet
Installation Manual

Document number: MNLCEXPROBUL_2531

Publication date: 09/25

Table of Contents

Legal Notices 4

About this manual 5
- Typographical conventions 5

Notes on copyright and information on trademarks 5

Safety 5
- Safety rules for hazardous environment 5
- Safety rules 6

Information on disposal and recycling 8

Product description and type designation 8
- Range of use 8
- Specific use conditions 8
- Gas Group, Dust Group and Temperatures 9
- Cable entry 9

Overview 9
- Junction Box View 9
- Rear View 10
- Front View 10
- Configuration Panel View 11
- Side View 11

Product marking label 12
- Requirements for the UL/CSA standard 12
- Model identification 13

Preparing the product for use 13
- Unpacking 14
- Content 14
- Safely disposing of packaging material 14

Installation 14
- Pre-Deployment In-Box Configuration 14
- Installation Steps 15
  - Mounting and Aiming Video Analytics Cameras 15
  - Installing the Junction Box 15
  - Earthing Equipotential Connection 19
  - Connecting Cables 19
  - Mounting the Camera 21
  - Aiming the Camera 21
  - Removing the Configuration Panel Cover 23
  - Initializing a Camera Username and Password 23

(Optional) Using the USB Wi-Fi Adapter 24
Assigning an IP Address 24
Setting the IP Address Using the ARP/Ping Method 24
Accessing the Live Video Stream 25
Zooming and Focusing the Camera 25
(Optional) Configuring microSD Card Storage 25
For More Information 26
Connecting to Power and External Devices 26
External Power Failover 28
Connection Status LED Indicator 28
Troubleshooting Network Connections and LED Behavior 29
Resetting to Factory Default Settings 29
Maintenance 30
Routine maintenance 30
Inspecting the cables 30
Cleaning 30
Routine cleaning 31
Cleaning the glass window 31
Cleaning the product 31
Limited Warranty and Technical Support 31
Pelco Troubleshooting Contact Information 31

Legal Notices

© 2025, Pelco Corporation. All rights reserved. PELCO, the PELCO logo, PELCO are trademarks of Pelco Corporation. ONVIF is a trademark of Onvif, Inc. Covered by one or moreclaims of the patents listed at patentlist.hevcadvance.com Other names or logos mentioned herein may be the trademarks of their respective owners. The absence of the symbols ™ and ® in proximity to each trademark in this document or at all is not a disclaimer of ownership of the related trademark. Pelco Corporation protects its innovations with patents issued in the United States of America and other jurisdictions worldwide (see www.pelco.com). Unless stated explicitly and in writing, no license is granted with respect to any copyright, industrial design, trademark, patent or other intellectual property rights of Pelco Corporation or its licensors.

Disclaimer

This document has been compiled and published using product descriptions and specifications available at the time of publication. The contents of this document and the specifications of the products discussed herein are subject to change without notice. Pelco Corporation reserves the right to make any such changes without notice. Neither Pelco Corporation nor any of its affiliated companies: (1) guarantees the completeness or accuracy of the information contained in this document; or (2) is responsible for your use of, or reliance on, the information. Pelco Corporation shall not be responsible for any losses or damages (including consequential damages) caused by reliance on the information presented herein.

Pelco Corporation
www.pelco.com

About this manual

Read all the documentation supplied carefully before installing and using this device. Keep the manual in a convenient place for future reference.

Typographical conventions

Danger: Explosion hazard. Read carefully to avoid danger of explosion.

Danger: High level hazard. Risk of electric shock. Disconnect the power supply before proceeding with any operation, unless indicated otherwise.

Danger: Mechanical hazard. Risk of crushing or shearing.

Danger: Hot surface. Avoid contact. Surfaces are hot and may cause personal injury if touched.

Danger: Emission of visible light or infrared. Can be harmful for eyes. Pay attention to the provided indications.

Caution: Medium level hazard. This operation is very important for the system to function properly. Please read the procedure described very carefully and carry it out as instructed.

Information in sections with Underlined titles information is subject to certification.

Notes on copyright and information on trademarks

The mentioned names of products or companies are trademarks or registered trademarks.

Safety

Safety rules for hazardous environment

Danger: Explosion hazard. Read carefully to avoid danger of explosion.

- Installation and maintenance of the device must be carried out by specialist technical staff in compliance with the applicable reference standard EN/IEC 60079-14, EN/IEC 60079-17 and national standards.
- Do not open the device when powered and in explosive atmosphere.
- Use appropriate tools for the installation. The particular nature of the site where the device is to be installed may mean special tools are required for installation.
- Make all connections, installation and maintenance work in a non-explosive atmosphere.
- Before powering the device in an explosive atmosphere, ensure the enclosure is closed correctly.
- The temperature of the surfaces of the device is increased by exposure to direct sunlight. The surface temperature class of the device was determined only with ambient temperature, without taking into consideration direct sunlight.
- Make sure that all the device is certified for the application and for the environment in which it will be installed.
- Any change that is not expressly approved by the manufacturer will invalidate the guarantee.

- The power connector must be glued when connected. Apply glue on the male connector.
- Indoor use / outdoor use, maximum altitude limited to 2000m.

Danger: Risk of explosion due to electrostatic discharge.

- The device is intended for fixed installation and the user shall not frequently touch the device in service (other than maintenance).
- Take suitable measures to ensure that no electrostatic discharges can build up in the classified area.
- The device must be cleaned using a damp cloth; compressed air must not be used.
- Make sure that all personnel and equipment are correctly grounded.
- Install only when the environmental relative humidity is over the 30% (stable, ever or for long time) or in ambient with humidity control system.
- The equipotential connection is mandatory to avoid the risk of ignition of products installed in potentially explosive environments.
- Do not install in a location where the electrostatic charge can increase without technical solutions able to avoid electrostatic charge allowed in IEC/TS 60079-32-1, TR 600079-32-1 and/or in IEC 60079-14 standards. Example:
  - Locations near ventilation systems.
  - Locations where there is a risk of an increase in electrostatic charge caused by compressed air and dust.
  - Locations where activities such as highly charged generating processes, mechanical friction and separation processes of dust, pneumatic powder conveying flow, liquid droplet spraying or charge spraying applications take place.

Safety rules

Danger: High level hazard. Risk of electric shock. Disconnect the power supply before proceeding with any operation, unless indicated otherwise.

- Make sure that the power is off when installing or carrying out maintenance, with the circuit-breaker open.
- A power disconnect device must be included in the electrical installation, and it must be very quickly recognizable and operated if needed.
- The device can only be considered to be switched off when the power supply has been disconnected and the connection cables to other devices have been removed.
- Be careful not to use cables that seem worn or old.
- All the cables must comply with IEC60332-1-2, IEC 60332-1-3 and IEC/EN60079-14.
- Before starting the installation make sure that the specifications for the power supply for the installation correspond with those required by the device.
- This equipment is not suitable for use in locations where children are likely to be present.
- Check that the power supply socket and cable are adequately dimensioned.
- Use suitable cables that can withstand the operating temperatures.
- All disconnected cables must be electrically isolated.
- Installation must be performed by qualified personnel only, and must conform to all local codes.

- Any external power supply connected to this product may only be connected to another Pelco product of the same model series. External power connections must be properly insulated.
- Do not connect directly to mains power for any reason.

Danger: Emission of of infrared light. Use appropriate shielding or eye protection.

Caution: Medium level hazard. This operation is very important for the system to function properly. Please read the procedure described very carefully and carry it out as instructed.

- Make sure that the installation complies with local regulations and specifications.
- Make connections and tests in the laboratory before carrying out installation on site.
- Make sure the product is to be secured to building before operation.
- The manufacturer declines all liability for damage to any of the apparatus mentioned in this installation manual, when resulting from tampering, use of non-original spare parts, installation, maintenance and repairs performed by non-authorised, nonskilled personnel.
- For technical services, consult only and exclusively authorized technicians.
- This product must only be repaired by suitably trained personnel or under the supervision of manufacturer personnel in accordance with the foreseen terms and conditions: IEC/EN60079-19.
- Only use original manufacturer spare parts. Strictly adhere to the maintenance instructions attached to each replacement kit.
- Since the user is responsible for choosing the surface to which the unit is to be anchored, we do not supply the fixing devices for attaching the unit firmly to the particular surface. The installer is responsible for choosing fixing devices suitable for the specific purpose on hand. Use methods and materials capable of supporting at least 4 times the weight of the device.
- Do not expose the camera directly to high levels of x-ray, laser, or UV radiation. Direct exposure may cause permanent damage to the image sensor.
- Do not install near any heat sources such as radiators, heat registers, stoves, or other sources of heat.
- Do not subject the device cables to excessive stress, heavy loads or pinching.
- Do not open or disassemble the device. There are no user serviceable parts.
- Refer all device servicing to qualified personnel. Servicing may be required when the device has been damaged (such as from a liquid spill or fallen objects), has been exposed to rain or moisture, does not operate normally, or has been dropped.
- Do not use strong or abrasive detergents when cleaning the device body.
- Use only accessories recommended by Pelco.

Info: Description of system specifications. We recommend reading this part carefully in order to understand the subsequent stages.

- Before proceeding with installation, check the supplied material to make sure it corresponds to the order specification by examining the identification labels.
- The manufacturer declines all responsibility for any damage caused by an improper use of the appliances mentioned in this manual. Furthermore, the manufacturer reserves the right to modify its contents without any prior notice. The documentation contained in this manual has been

collected and verified with great care. The manufacturer, however, cannot take any liability for its use. The same thing can be said for any person or company involved in the creation and production of this manual.

- For all maintenance interventions, we recommend you return the product to the laboratory that will perform all required operations.
- This is a Class A product. In a domestic environment this product may cause radio interference. In this case the user may be required to take adequate measures.
- To comply with the main supply voltage dips and short interruption requirements, use a suitable Uninterruptible Power Supply (UPS) to power the unit.
- This equipment contains a coin cell battery. Risk of fire, explosion, and burns. Do not disassemble, crush, heat above 100°C (212°F), or incinerate.

Information on disposal and recycling

The European Directive 2012/19/EU on Waste Electrical and Electronic Equipment (WEEE) mandates that these devices must not be disposed of in the normal flow of municipal solid waste, but they must be collected separately in order to optimize the recovery stream and recycling of the materials that they contain and to reduce the impact on human health and the environment due to the presence of potentially hazardous substances.

The symbol of the crossed out bin is marked on all products to remember this.

The waste may be delivered to appropriate collection centers, or may be delivered free of charge to the distributor where you purchased the equipment at the time of purchase of a new equivalent or without obligation to a new purchase for equipment with size smaller than 25cm (9.8in). For more information on proper disposal of these devices, you can contact the responsible public service.

Product description and type designation

The ExSite® Pro Bullet of aluminum Bullet cameras can be installed in potentially explosive environments.

The ExSite® Pro Bullet has an IP64 degree of protection (in accordance with IEC/EN 60079-0, IEC/EN60079-7, IEC/EN60079-31) and can be installed in environments with temperatures from -40°C to +65°C

The power supply voltage is indicated on the product identification label:

• 12 Vdc or 24 Vdc or PoE or PoE+

Range of use

The device is designed for use in a fixed location, for surveillance of areas classified as zone 2 and zone 21-22 with potentially explosive atmospheres.

The unit has been built and certified in compliance with directive 2014/34/UE and with the international standards IECEX, which define its range of application and minimum safety requirements.

Specific use conditions

Ambient temperature and Surface temperature. See installation instructions.

Take care to prevent accumulation of electrostatic charges. See installation instructions.

ExSite® Pro Bullet has only been evaluated for low risk of mechanical impact

Micro USB port located in the configuration panel for connection of USB Wi-fi Adapter (USB-AC56-**-MSI) is for configuration purpose only and when the area is free of ignitable concentrations.

For EPL Gc the following additional Specific Conditions of Use apply:

- The equipment shall only be used in an area of at least pollution degree 2, as defined in IEC 60664-1.
- Transient protection shall be provided that is set at a level not exceeding 140 % of the peak rated voltage value at the supply terminals to the equipment.

Gas Group, Dust Group and Temperatures

The device is certified with type protection Ex ec, Ex tb, group IIC (Gas) and group IIIC (Dust), temperature class T4/T135°C, ambient temperature -40°C/+65°C.

Cable entry

The device is supplied with two grommets. Use them to make the connections. Unused cable entries must be closed using appropriate grommet supplied. The cable entry temperatures are specified in the marking. The grommet has to be present, they guarantee the safety of the product.

Overview

Junction Box View

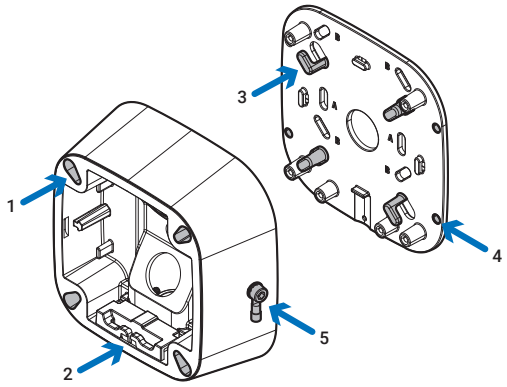

1. **Camera Mounts**

   Points for installing the camera to the mounting bracket.

2. **Mounting hinge**

   Point to hold the camera to the junction box while connecting the required cables.

3. **Cable hooks**

   Points to wrap the excess cable length around.

4. **Mounting holes**

   Holes for securing the mounting bracket to the mounting surface.

5. **Earthing Equipotential Connection**

   Eyelet terminal for mandatory earthing equipotential connection.

Rear View

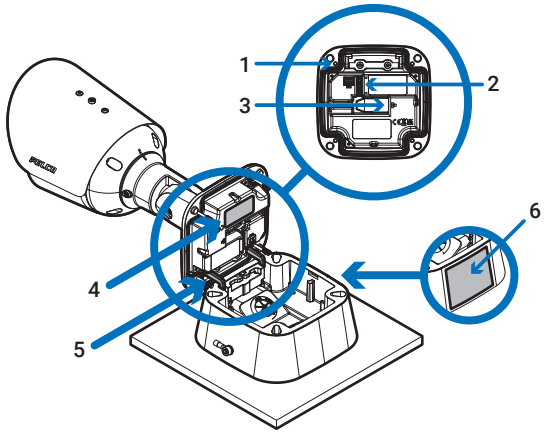

1. **Camera mounting screws**

   Screws for mounting the camera to the junction box.

2. **Power and I/O cable connectors**

   Cable connectors for connecting the camera cables to auxiliary power and I/O devices. For more information, see *Connecting to Power and External Devices*.

3. **Ethernet port**

   Accepts an Ethernet connection to a network. Server communication and image data transmission occurs over this connection. Also receives power when it is connected to a network that provides Power over Ethernet.

4. **Regulatory tag**

   Provides regulatory information.

5. **Mounting hooks**

   Hooks to attach the camera to the junction box while connecting the required cables.

6. **Hazardous Location Marking Label**

   Provides Hazardous Location Marking information.

Front View

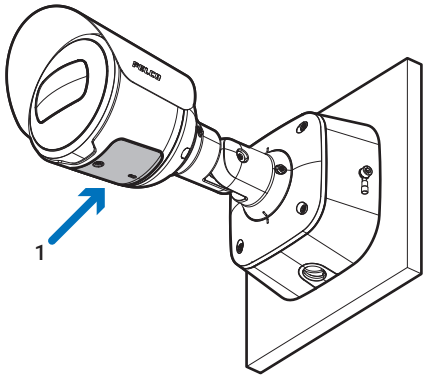

1. **Configuration panel cover**

   Covers the configuration panel. For more information on the configuration panel, see the *Overview*.

Configuration Panel View

Danger: Do not open the device when powered and in explosive atmosphere.

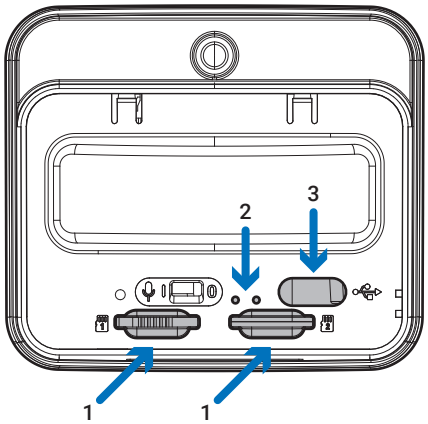

1. **microSD card slots (x2)**

   Accepts up to two microSD cards for onboard storage. Install microSD cards so the metal contacts are facing upward. For more information, see *(Optional) Configuring microSD Card Storage*.

2. **Connection status LED indicators**

   Provides information about device operation. For more information, see *Connection Status LED Indicator*.

3. **USB-C**

   Accepts a USB type-C to USB adapter. Only required when using the USB Wi-Fi Adapter. For more information, see *(Optional) Using the USB Wi-Fi Adapter*.

Side View

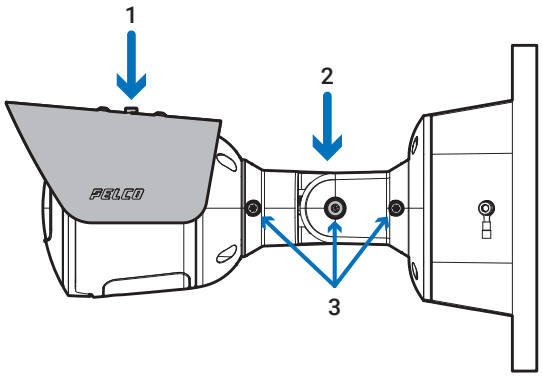

1. **Sun shroud**

   A cover to help protect the lens against glare from the sun.

2. **Mount arm**

   Adjustable mount arm for positioning the camera.

3. **Adjustment screws**

   Provides a locking mechanism for the mount arm.

Product marking label

Figure 1: Product marking label.

Requirements for the UL/CSA standard

In the USA, the National Electrical Code (NEC) and in Canada the Canadian Electrical Code (CEC) apply to electrical equipment used on hazardous industrial premises.

Important safety instructions

WARNING - Potential electrostatic charging hazard - See installation instructions.

AVERTISSEMENT - Danger potentiel de charges èlectrostatiques - Voir les instructions d'installation.

Connections

The connection has to be done using the grommets supplied.

Regulation references:

UL 60079-0, Explosive Atmospheres - Part 0: Equipment - General Requirements

UL 60079-7, Explosive atmospheres - Part 7: Equipment protection by increased safety "e"

UL 60079-31, Explosive Atmospheres - Part 31: Equipment Dust Ignition Protection by Enclosure "t"

CSA C22.2 No. 60079-0, Electrical Apparatus for Explosive Gas Atmospheres - Part 0: General Requirements

CSA C22.2 No. 60079-7, Explosive Atmospheres - Part 7: Equipment Protection by Increased Safety "e"

CSA C22.2 No. 60079-31, Explosive Atmospheres - Part 31: Equipment Dust Ignition Protection by Enclosure "t"

UL 121201

CSA C22.2 NO. 213-17

Model identification

EXFP1 - CERTIFICATIONS AND MARKING				
Part Number	Certification	Marking	Ambient temperature	Cable entry temperature
EXFP1-8V9-EBT0-IR EXFP1-8V9-EBT0-IRB	ATEX - UL 24 ATEX 3308X, UL 24 ATEX 3226X	Ex II 3G Ex ec IIC T4 Gc Ex II 2D Ex tb IIIC T135°C Db	-40°C ≤ Ta ≤ +65°C	+80°C
	IECEx ULD 24.0017X	Ex ec IIC T4 Gc Ex tb IIIC T135°C Db		
	cULus File E319666 Hazardous Location America	Class I, Zone 2, AEx ec IIC T4 Gc Zone 21, AEx tb IIIC T135°C Db Class I Div 2 Group A, B, C, D T4 Class II Div 2 Group F, G T4		
	cULus File E319666 Hazardous Location Canada	Ex ec IIC T4 Gc X Ex tb IIIC T135°C Db X Class I Div 2 Group A, B, C, D T4 Class II Div 2 Group F, G T4		
	UK EX - UL24UKEX3011X, UL24UKEX3012X	Ex II 3G Ex ec IIC T4 Gc Ex II 2D Ex tb IIIC T135°C Db		
	INMETRO - UL-BR 25.0057X	Ex ec IIC T4 Gc Ex tb IIIC T135°C Db		
	KCs - 25-KA4BO-0192X, 25-KA4BO-0193X	Ex ec IIC T4 Gc Ex tb IIIC T135°C Db		
	TS mark	Ex ec IIC T4 Gc Ex tb IIIC T135°C Db		

Table 1: ExSite® Pro Bullet (EXFP1) - CERTIFICATIONS AND MARKINGS

Preparing the product for use

⚠ Before carrying out any type of maintenance, read the "Safety rules" chapter carefully in the product manual.

Unpacking

When the product is delivered, make sure that the package is intact and that there are no signs that it has been dropped or scratched. If there are obvious signs of damage, contact the supplier immediately. When returning a faulty product we recommend using the original packaging for shipping. Keep the packaging in case you need to send the product for repairs.

Content

Check the contents to make sure they correspond with the list of materials as below:

- ExSite® Pro Bullet Camera
- Mounting template sticker
- 4 screws and anchors for solid walls
- T20 Pin-In star-shaped driver
- Junction Box
- Wall plate
- Aux terminal block
- I/O Terminal Block
- 1/2" conduit adapter
- Grommet piercing cap

Safely disposing of packaging material

The packaging material can be all recycled. The installer technician will be responsible for separating the material for disposal, and in any case for compliance with the legislation in force where the device is to be used.

Installation

Pre-Deployment In-Box Configuration

The camera comes equipped with an RJ45 connector that is accessible from the outside of the box for users that want to configure camera settings before installing the camera. The RJ45 connector is accessible through the small flap on the side of the camera box for easy configuration before unpacking the camera.

1. Locate and open the flap on the side of the camera packaging. Look for the *Config* label:

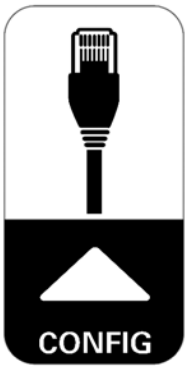

2. Connect a network cable to the RJ45 plug on the configuration cable. The network cable must provide PoE power, IEEE 802.3af Class 3, to power the camera during configuration.
3. Connect to the camera using an ACC Client, Unity Video Client, the Camera Configuration Tool, or the camera's web browser interface to configure the camera's settings. For more information about connecting to the camera, see *Assigning an IP Address*, and *Accessing the Live Video Stream*.
4. Once you have finished making configuration changes, unplug the network cable.

Installation Steps

Mounting and Aiming Video Analytics Cameras

When installing an Pelco video analytics camera, follow the listed mounting and aiming recommendations to maximize the camera's analytics capabilities:

- The camera should be installed above 2.74 m (9 feet).
- The camera should tilt downwards no more than 45 degrees.
- The camera image should be level with the horizon line.
- The camera should be mounted to a stable surface to minimize the physical movement of the camera after installation.

For more details, see the *Designing a Site with Pelco Smart Analytics Guide*. This document is available on the Pelco website.

Installing the Junction Box

When installing the junction box, the cables for the camera can be accessed through either a hole in the wall or from a side conduit entry into the junction box. If your installation requires a side conduit to access the required cables, refer to *Installing the Junction Box*.

1. Use the mounting template to drill four mounting holes and the cable entry hole into the mounting surface.

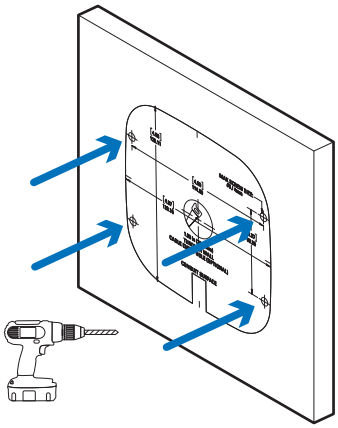

2. Fasten the wall plate to the mounting surface with the screws.

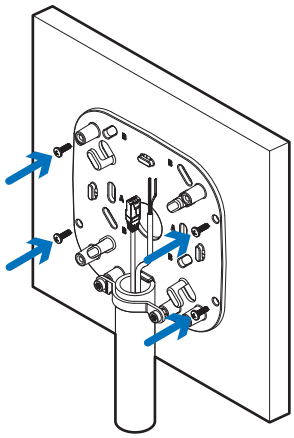

3. Pull the required cables through the cable entry hole.

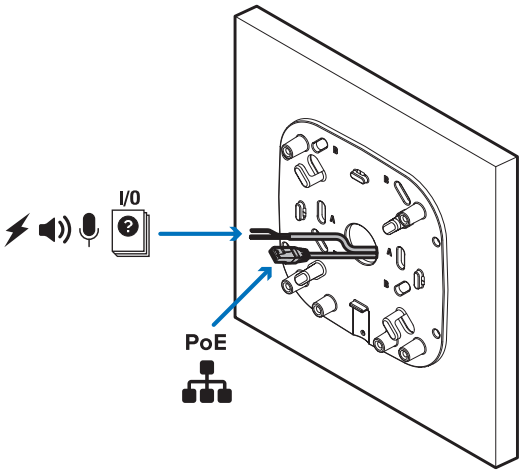

4. Fasten the junction box to the wall plate and pull the cords through.

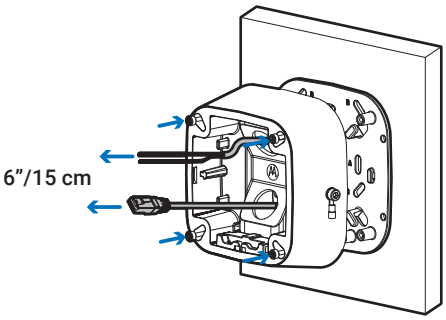

It is recommended that silicone sealant be applied around the edge of the junction box to prevent moisture from entering the mounting surface.

5. Hook the camera onto the junction box using the mounting hooks, and let the camera hang.

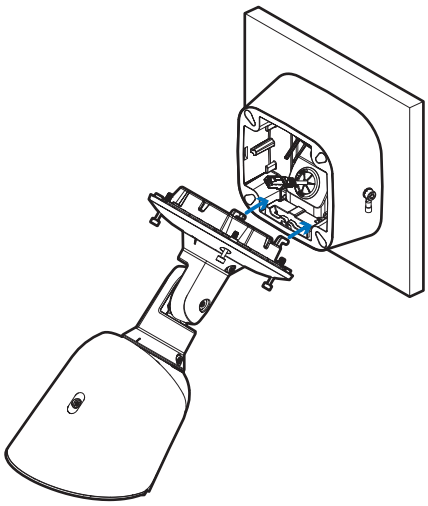

Accessing Cables through the Side Conduit

1. Use the mounting template to drill four mounting holes into the mounting surface.

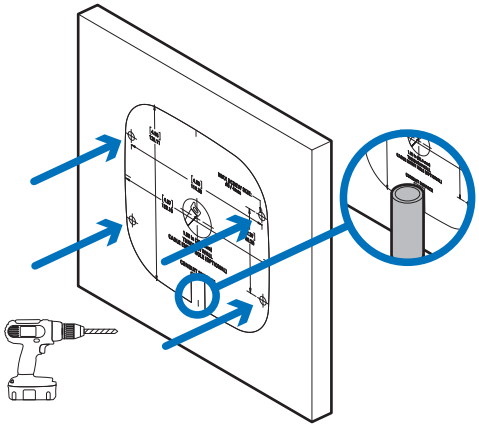

2. Fasten the wall plate to the mounting surface with the screws.

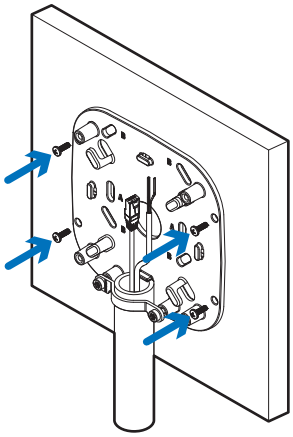

3. Secure the conduit pipe in place using a pipe clamp.

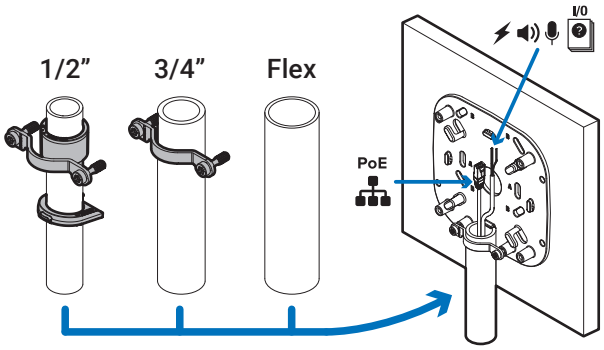

4. Pull the cables through the conduit and wrap the excess cable length around the cable hooks.

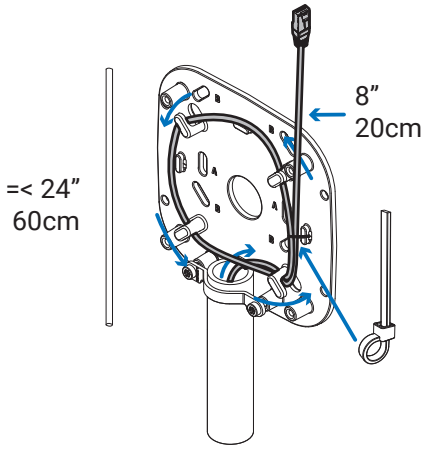

5. Fasten the cable with a zip tie.
6. Fasten the junction box to the wall plate and pull the cords through.

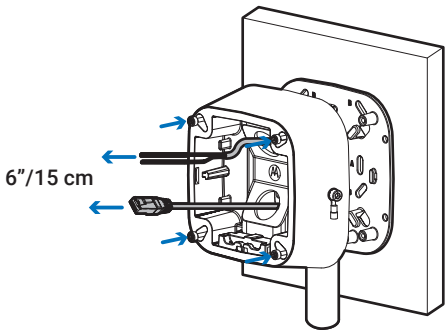

It is recommended that silicone sealant be applied around the edge of the junction box to prevent moisture from entering the mounting surface.

7. Hook the camera onto the junction box using the mounting hooks, and let the camera hang.

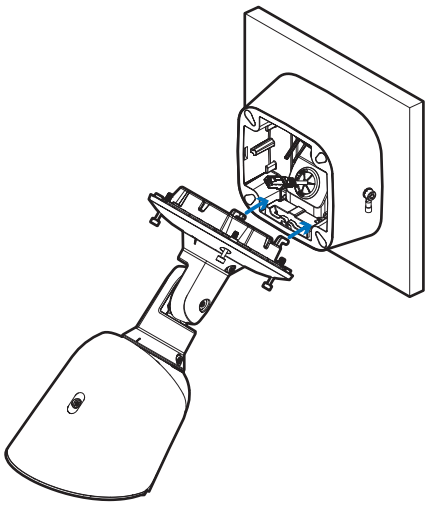

Earthing Equipotential Connection

The equipotential connection must be carried out using an external cable with a minimum 4mm² section (11AWG).

Connect the cable for the earthing equipotential connection with the eyelet terminal supplied (suitable for cables with 4mm² (11AWG) up to 6mm² (9AWG) section).

Fasten the eyelet using the M5 screw and lock washer supplied.

Characteristics of the M5 screw:

- Material: A4
- Screw head: ISO 4762
- Length: 8mm (0.3in)
- Yield stress (min): 450N/mm²

CAUTION! The external equipotential connections must be set up through the eyelet on the outside of the product. Do not use as a protective terminal.

Connecting Cables

Before connecting any cables, ensure that the cable connections are properly protected from moisture and corrosion. Make sure the protective cable boot is installed over the Ethernet port to protect the connection from dust and moisture.

1. If there are external input or output devices that need to be connected to the camera (for example: door contacts, relays, etc.), connect the devices to the camera's digital I/O connector cables. For more information see *Connecting to Power and External Devices*.
2. If an external microphone and/or speakers need to be connected to the camera, connect the devices to the camera's audio I/O cables. For more information, see *Connecting to Power and External Devices*.
3. Pull the cables through the wall or side conduit.
4. Put the piercing cap through on the Ethernet cable and push it through the grommet.

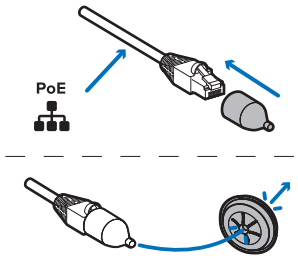

5. Thread the cable through the junction box and sit the grommet in the cable hole of the junction box.

   Danger: To ensure the IP grade, if the installation requires one cable only, use the pre-opened grommet and keep the other intact.

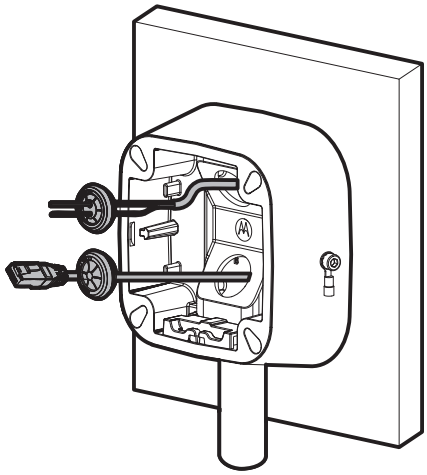

6. Connect a network cable to the Ethernet port (RJ-45 connector).

   The Link LED indicator will turn on once a network link has been established.

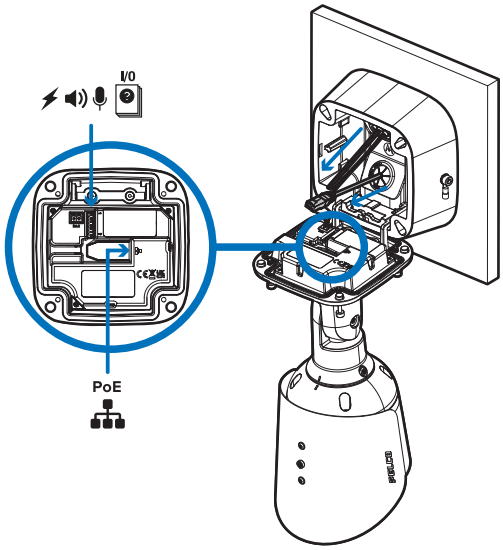

7. Connect power using one of the following methods:
   - Power over Ethernet (PoE) Class 3 or Class 4 — If PoE is available, the camera LEDs will turn on.
   - External Power — Connect an external 12-24 VDC +/-10% to the terminal block.
8. Check that the Connection Status LED indicator indicates the correct state. For more information, see *Connection Status LED Indicator*.

Mounting the Camera

Once all the cable connections have been made, secure the camera to the mounting bracket.

1. Tuck the extra lengths of cables into the cable entry hole.
2. Secure the camera to the mounting bracket:
   a. Raise the camera until it covers the mounting bracket.
   b. Use the camera mounting screws to fasten (torque 2 Nm) the camera to the bracket.

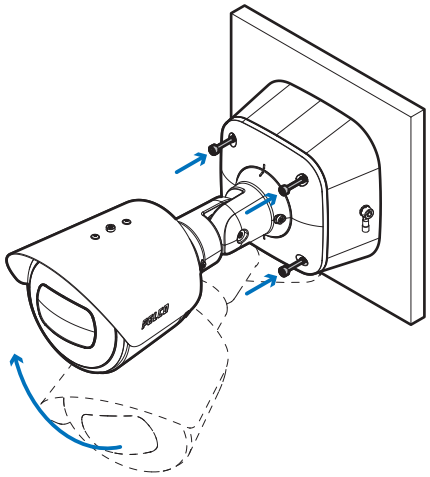

Aiming the Camera

Reference the camera's live stream as you aim the camera.

1. To aim the camera, loosen the adjustment screws on the camera mount arm.

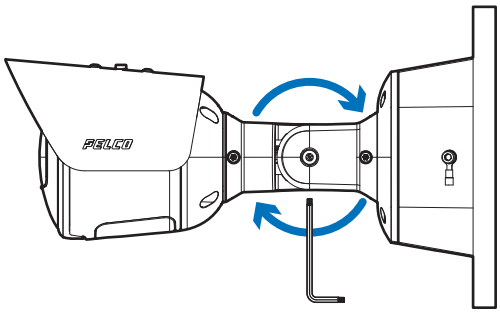

2. Rotate and move the camera and mount arm as required. Review the camera's live video stream to help aim the camera correctly.

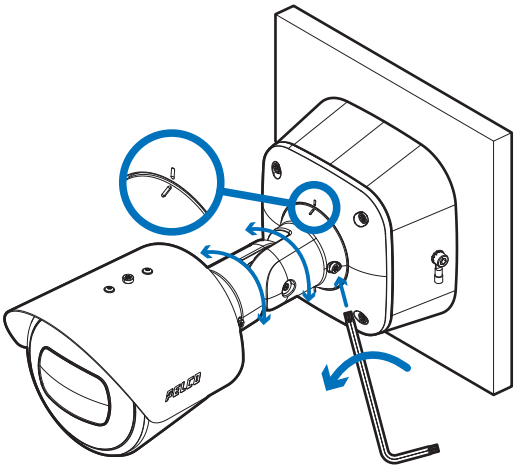

3. To use the camera in portrait mode instead of landscape mode:
   1. Use a T20 Pin-In star-shaped driver to unscrew and remove the sun shroud mount from the camera.

      Info: The sun shroud should only be removed when the camera is installed indoors and space is limited.

      1. Rotate the camera.

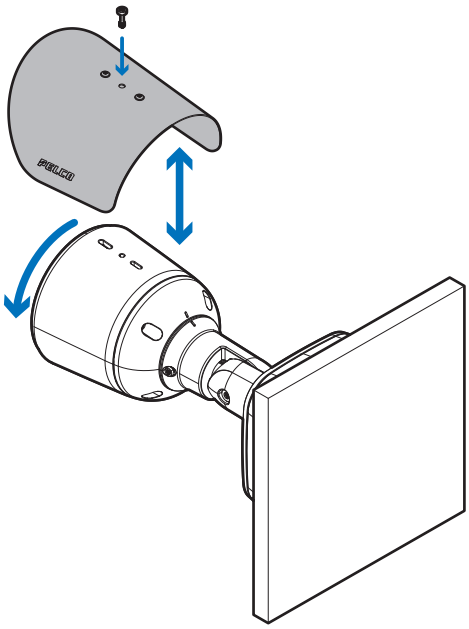

   2. Use a T20 Pin-In star-shaped driver to screw on the sun shroud mount.
4. Tighten the adjustment screws on the mount arm to secure the camera's position.

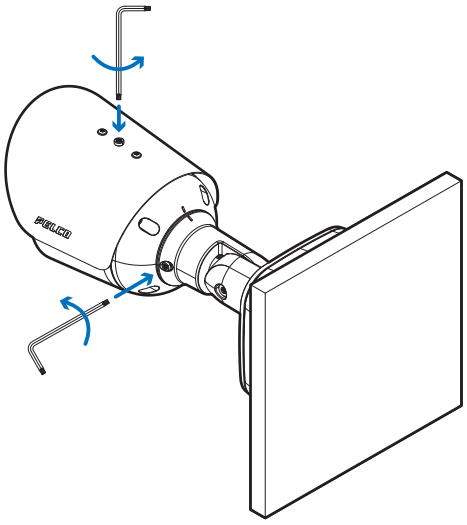

5. In the camera web browser interface, Pelco Unity Video or the Pelco Control Center software adjust the camera's Image and Display settings. You can set the zoom position, focus and change the image rotation.

Window protective tape to remove.

Removing the Configuration Panel Cover

Danger: Do not open the device when powered and in explosive atmosphere.

1. Use a T20 Pin-In star-shaped driver to unscrew the configuration panel cover.

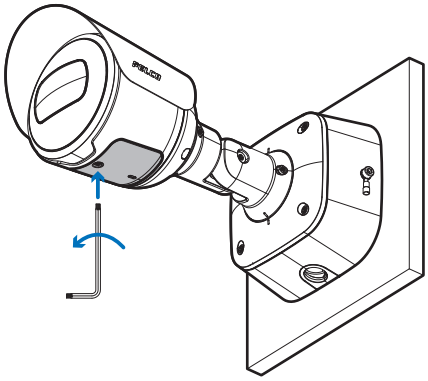

2. Remove the cover from the configuration panel.

Initializing a Camera Username and Password

Info: You must create a user with administrator privileges before the camera is operational.

The new user can be created using the following methods:

- Camera's web interface. Enter the camera's IP address in a web browser to access the web interface. For more information, see the Pelco ExSite® Pro Bullet Operations Manual. If the

camera is in the factory default state, you will be redirected to the New User page to create an administrator user:

1. Enter a new User Name or keep the default administrator name.
2. Enter a new Password for the user. It is recommended to use a secure and complex password.
3. Confirm the new password.
4. For the first user, Administrator must be selected in the Security Group drop-down menu.
5. Click Apply. After creating the user, you will be asked to login.

- Camera Configuration Tool: discovered cameras that are identified by will require a first user to be set. Select the Admin Users tab to create the first user. For more information, see the *Camera Configuration Tool User Guide*.

Set up the first user through the camera's Web Interface or Camera Configuration Tool before you connect the camera to a VMS.

(Optional) Using the USB Wi-Fi Adapter

If you have a USB Wi-Fi Adapter (USB-AC56-NA-MSI-B or USB-AC56-EU-MSI-B), attach it to the camera's USB-C port to access the camera's mobile web interface.

After you connect to the Wi-Fi signal broadcast by the adapter, you can access the mobile web interface from any mobile device using the following address:

http://camera.lan

The camera will reserve the 10.11.22.32/28 subnet for internal use while the USB Wi-Fi Adapter is plugged in.

For more information about configuring the camera from the mobile web interface see *USB Wi-Fi Adapter System User Guide*.

Assigning an IP Address

The device automatically obtains an IP address when it is connected to a network.

If the device cannot obtain an IP address from a DHCP server, it will use Zero Configuration Networking (Zeroconf) to choose an IP address. When set using Zeroconf, the IP address is in the 169.254.0.0/16 subnet.

The IP address settings can be changed using one of the following methods:

- Device's web browser interface: http://*<camera IP address>/*.
- Network Video Management software application (for example, the Pelco Unity Video software).

When you log in the first time, the camera will be in a factory default state and no password is required. You must create a user with administrator privileges before the device is operational. For more information, see *Initializing a Camera Username and Password*.

Setting the IP Address Using the ARP/Ping Method

Note: The ARP/Ping Method will not work if the **Disable setting static IP address through ARP/Ping method** checkbox is selected in the camera's device's web browser interface. For more information, see the *PelcoExSite® Pro Bullet Operations Manual*.

Complete the following steps to configure the camera to use a specific IP address:

1. Locate and make note of the MAC Address (MAC) listed on the Serial Number Tag for reference.
2. Open a Command Prompt window and enter the following commands:
   a. `arp -s` *<New Camera IP Address> <Camera MAC Address>*
      For example: `arp -s 192.168.1.10 00-18-85-12-45-78`
   b. `ping -l 123 -t` *<New Camera IP Address>*
      For example: `ping -l 123 -t 192.168.1.10`
3. Reboot the camera.
4. Close the Command Prompt window when you see the following message:
   `Reply from <New Camera IP Address>: ...`

Accessing the Live Video Stream

Live video stream can be viewed using one of the following methods:

- The mobile web interface using the USB WiFi Adapter. For more information, see *(Optional) Using the USB Wi-Fi Adapter*.
- Web browser interface: http://< *camera IP address>/*.
- Network Video Management software application (for example, the Pelco Unity Video software).

When you log in the first time, the camera will be in a factory default state and no password is required. You must create a user with administrator privileges before the device is operational. For more information, see *Initializing a Camera Username and Password*.

Zooming and Focusing the Camera

- In the camera web browser interface, Pelco Unity Video or the Pelco Control Center software, use the camera's Image and Display settings to zoom and focus the camera.
  a. Use the zoom buttons to zoom the camera in or out.
  b. Click **Auto Focus** to focus the lens.
  c. Use the focus near and far buttons to manually adjust the focus.

(Optional) Configuring microSD Card Storage

To use the camera's onboard storage feature, you must insert 1 microSD card into a microSD card slot. While there are two microSD slots, currently the camera only supports a single microSD card in either slot for onboard storage. For the location of the microSD card slots, see *Overview*.

It is recommended that the microSD card have a write speed of class 10 or better. If the microSD card does not meet the recommended write speed, the recording performance may suffer and result in the loss of frames or footage.

1. Insert a microSD card into the camera.
2. Do not force the microSD card into the camera or you may damage the card and the camera. The microSD card can only be inserted in one direction.
3. Access the camera's web interface to enable the onboard storage feature. For more information, see the *Pelco IP Camera Web Interface User Guide*. For more information, see the Pelco ExSite® Pro Bullet Operations Manual.

For More Information

Additional information about setting up and using the device is available in the following guides:

- *Pelco ExSite Pro Bullet Installation Manual* available on the Pelco website: www.pelco.com.
- *Camera Configuration Tool User Guide.*

These guides are available on help.avigilon.com and on the Pelco website: avigilon.com/support.

Connecting to Power and External Devices

Danger: The power connector must be glued when connected. Apply glue on the male connector.

Glue characteristic: Temperature range -40°C / +100°C, suitable for plastic material.

If PoE is not available, the camera may be powered through the auxiliary power cable using 12-24 VDC +/-10%. The power consumption information is listed in the product specifications.

This product is intended to be supplied by a UL Listed Power Unit marked “Class 2” or “LPS” or “Limited Power Source” with output rated 12 — 24VDC, 13 W min. or PoE rated 48 V DC, 13 W min. The camera must not be powered with 24 VAC aux power or the camera could be physically damaged.

External devices are connected to the camera through pluggable terminal blocks. For the locations of the terminals, see *Overview*. The pinout for the I/O terminal block is shown in the following diagram:

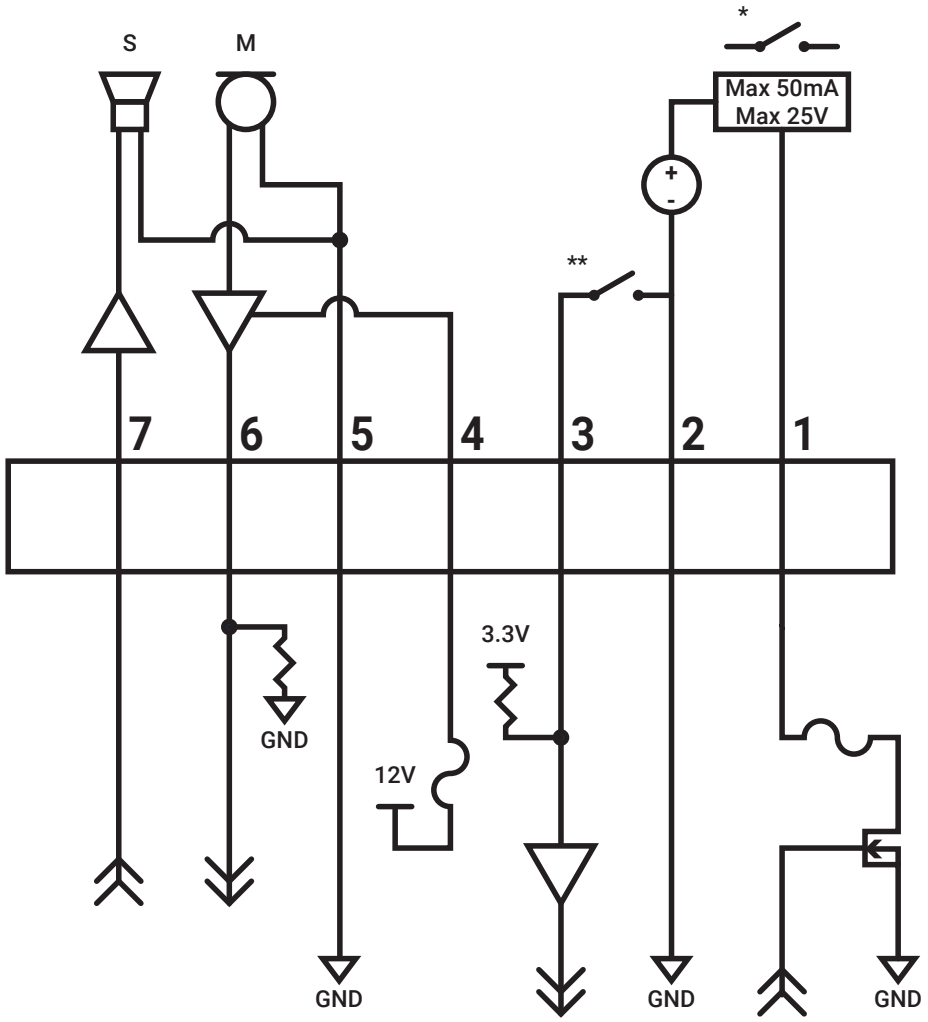

1. Digital Output
2. Ground
3. Digital Input
4. Voltage Output (Max 50mA)
5. Audio Ground
6. Audio Input (line level)
7. Audio Output (line level)

* — Relay
** — Switch
M — Microphone
S — Speaker

External Power Failover

If the camera has power available from both an external Aux power supply and a PoE PSE (Power Sourcing Equipment) device, the camera will draw power from Aux. In the event that the camera loses power from the preferred Aux power supply it can transition to drawing power from the PoE PSE device.

Seamless failover allows the camera to transition between PoE and auxiliary power sources without any interruption of camera operation or video recording. This is mainly useful if you want redundant power sources so that backup power will be available if one power source goes down.

Seamless failover is only guaranteed when PoE Class 4 (25.5W) "full power" is available on the PoE port. Auxiliary (Aux) power is always assumed to be “full power,” meaning that there is enough power available for all possible camera functions. PoE, on the other hand, has many different power classes and the product’s functionality depends on the PoE power class that is available.

If the PSE demotes the camera to PoE Class 3 (13W), the camera will boot and display an “insufficient power” message. Therefore, if the camera is connected to a Class 3 PoE source while running on Aux power and using full IR power and the Aux power source is disconnected, the camera will most likely overload the PSE and reboot. However, if the camerais not using IR LEDs and Aux power is removed, the Class 3 PoE power source would be adequate to guarantee seamless failover.

There is a downside to having seamless failover if you aren’t using this functionality and are connecting your cameras to PoE-enabled switches while running the camera on Aux power. Since the PoE connection remains active when running on Aux power, if the camera is connected to a PoE-enabled port on a switch, the switch by default will allocate some of its overall power budget to that port.

Connection Status LED Indicator

Once connected to the network, the green Connection Status LED indicator will display the progress in connecting to the Network Video Management software.

The following table describes what the LED indicator shows:

Connection State	Connection Status LED Indicator	Description
Obtaining IP Address	One short flash every second	Attempting to obtain an IP address.
Discoverable	Two short flashes every second	Obtained an IP address but not connected to the Network Video Management software.
Upgrading Firmware	Two short flashes and one long flash every second	Updating the firmware.
Connected	On	Connected to the Network Video Management software. Connected to the Network Video Management software, a Unity Video Server, or an ACC™ Server. The default connected setting can be changed to Off using the camera's web user interface. For more information see the *Pelco IP Camera Web Interface User Guide*. For more information,

Connection State	Connection Status LED Indicator	Description
		see the Pelco ExSite® Pro Bullet Operations Manual.

Troubleshooting Network Connections and LED Behavior

For any of the below LED behaviors, ensure that the camera is getting power and is using a good network cable before trying another solution.

LED Behavior	Suggested Solution
Green LED is off and amber is on	Perform a factory reset of the camera using the physical firmware revert button. Resetting through the camera's web interface will not produce the desired result.
Both LEDs are off and the camera is not connected or streaming video	Check the General setup page in the camera's web interface to ensure the LEDs are not disabled. If the LEDs are not disabled, perform a factory reset of the camera using the physical firmware revert button. Resetting through the camera's web interface will not produce the desired result.
Both LEDs are blinking several times at the same time, then pause and repeat the blinking	Perform a factory reset of the camera using the physical firmware revert button. Resetting through the camera's web interface will not produce the desired result.
A different LED blinking pattern than those described above	Perform a factory reset of the camera using the physical firmware revert button. Resetting through the camera's web interface will not produce the desired result.

Resetting to Factory Default Settings

If the device no longer functions as expected, you can choose to reset the device to its factory default settings.

Use the firmware revert button to reset the device. The firmware revert button is shown in the following diagram:

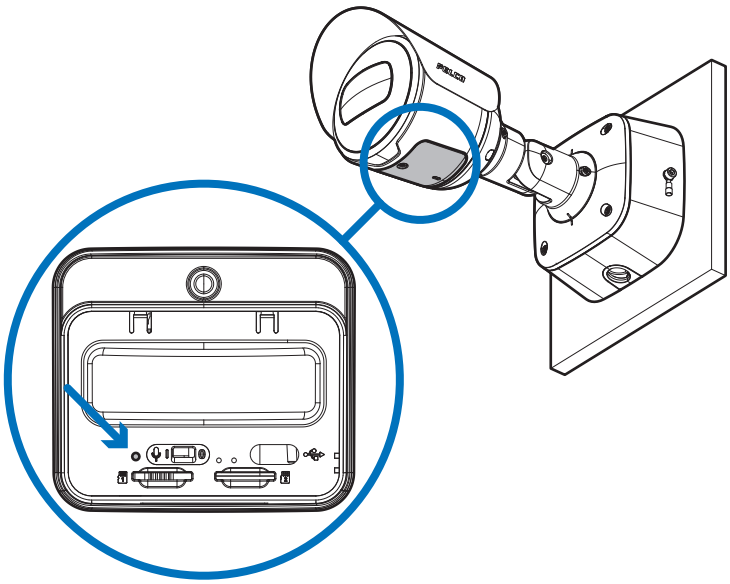

Resetting the camera will not affect video that has been recorded to the microSD card.

The firmware revert button on the rear of the camera

1. Ensure the device is powered on.
2. Using a straightened paperclip or similar tool, gently press and hold the firmware revert button.
3. Release the button after three seconds.

Do not apply excessive force. Inserting the tool too far may damage the camera.

Maintenance

Before carrying out any type of maintenance, carefully read the *Safety* chapter in this manual.

When contacting the manufacturer for assistance provide the serial number and the identification code of the model. Use only manufacturer original spare parts.

Routine maintenance

Inspecting the cables

The cables must not show signs of damage or wear, which could generate hazardous situations. In this case extraordinary maintenance is necessary.

Cleaning

Before carrying out any type of maintenance, read the "Safety rules" chapter carefully in the product manual.

Cleaning frequency will depend on the type of environment in which the product is used.

Routine cleaning

Cleaning the glass window

Cleaning must be done with mild soap diluted with water.

Cleaning the product

The outside surface of the product must never be covered in more than 5 mm of dust.

The cleaning of the product must be carried out according to the instructions in this chapter in order to prevent accumulation of electrostatic charges.

The device must be cleaned using a damp cloth; compressed air must not be used.

Limited Warranty and Technical Support

Pelco warranty terms for this product are provided at www.pelco.com/warranty.

Warranty service and technical support can be obtained by contacting Pelco Technical Support: www.pelco.com/contact.

Pelco Troubleshooting Contact Information

For further assistance, contact Pelco Product Support at 1-800-289-9100 (USA and Canada) or +1-559-292-1981 (international).

Do not try to repair the unit yourself. Leave maintenance and repairs to qualified technical personnel only.

Manufacturer: VIDEOTEC s.r.l.
Address: Via Friuli, 6-I-36015 Schio (VI) - Italy
(+39) 0445 697411 Tel

Pelco, Inc.
625 W. Alluvial Ave., Fresno, California 93711 United States
(800) 289-9100 Tel
(800) 289-9150 Fax
+1 (559) 292-1981 International Tel
+1 (559) 348-1120 International Fax
www.pelco.com

Pelco, the Pelco logo, and other trademarks associated with Pelco products referred to in this publication are trademarks of Pelco, Inc. or its affiliates. ONVIF and the ONVIF logo are trademarks of ONVIF Inc. All other product names and services are the property of their respective companies. Product specifications and availability are subject to change without notice.

© Copyright 2025, Pelco, Inc. All rights reserved.