MOTOROLA SOLUTIONS

PELCO

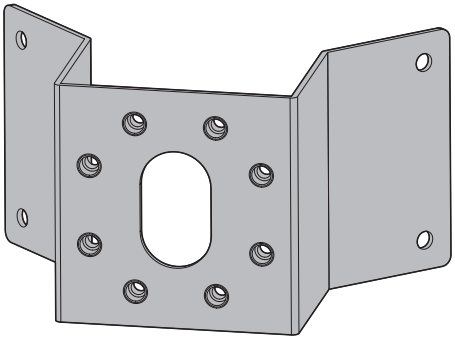

UEAC
Installation Manual

Document number: MNLKUEAC_2320
Publication date: 02/23

UEAC

Corner mount adaptor

1 About this manual

Read all the documentation supplied carefully before installing and using this unit. Keep the manual in a convenient place for future reference.

1.1 Typographical conventions

CAUTION!
Medium level hazard.
This operation is very important for the system to function properly. Please read the procedure described very carefully and carry it out as instructed.

INFO
Description of system specifications.
We recommend reading this part carefully in order to understand the subsequent stages.

2 Notes on copyright and information on trademarks

The mentioned names of products or companies are trademarks or registered trademarks.

3 Safety rules

CAUTION! Device installation and maintaining must be performed by specialist technical staff only.

- The manufacturer declines all responsibility for any damage caused by an improper use of the appliances mentioned in this manual. Furthermore, the manufacturer reserves the right to modify its contents without any prior notice. The documentation contained in this manual has been collected and verified with great care. The manufacturer, however, cannot take any liability for its use. The same thing can be said for any person or company involved in the creation and production of this manual.
- Before starting any operation, make sure the power supply is disconnected.
- Use only original spare parts. Non-original spare parts could cause fire, electrical discharge or other hazards.

4 Identification

4.1 Product description and type designation

Corner mount adapter, constructed from AISI 316L sheet steel. For Esprit Compact (Pelco) and ULISSE EVO DUAL (VIDEOTEC) using the UEBW wall bracket, Esprit Anti-Corrosion Fixed (Pelco), NTX (VIDEOTEC).

5 Preparing the product for use

Any change that is not expressly approved by the manufacturer will invalidate the guarantee.

5.1 Unpacking

When the product is delivered, make sure that the package is intact and that there are no signs that it has been dropped or scratched.

If there are obvious signs of damage, contact the supplier immediately.

When returning a faulty product we recommend using the original packaging for shipping.

Keep the packaging in case you need to send the product for repairs.

5.2 Safely disposing of packaging material

The packaging material can all be recycled. The installer technician will be responsible for separating the material for disposal, and in any case for compliance with the legislation in force where the device is to be used.

5.3 Contents

Check the contents to make sure they correspond with the list of materials as below:

- Corner mount adaptor
- Bolts and screws
- Instruction manual

6 Installation

Take special care when attaching and fastening down the apparatus. If it is to be attached to a concrete surface you must use dowel pins with a traction torque rating of at least 300dN each. For a metal surface use screws with a diameter of at least 8mm and of an appropriate length. The fastening system must be capable of supporting at least 4 times the weight of the entire equipment (pan & tilt, lens, camera, supports and adapters).

Fasten the wall corner adaptor using the 4 holes (01). Use the screws with a diameter equal to 8mm.

Fasten the unit (Esprit Anti-Corrosion Fixed (Pelco), NTX (VIDEOTEC)) or support (UEBW) to the adaptor using the screws and washers supplied (03), using the 4 threaded holes (02). Make sure the thread are free of dirt and debris.

Put some thread-locker into the holes for screws (Loctite 243®).

Pay attention to the fixing. Tightening torque: 10.5Nm (±0.25Nm).

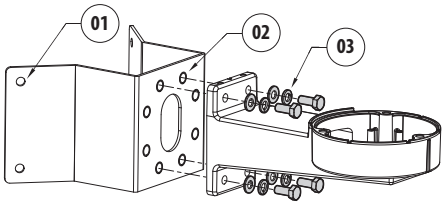

Fig. 1 Fastening for UEBW (Esprit Compact (Pelco), ULISSE EVO DUAL (VIDEOTEC)).

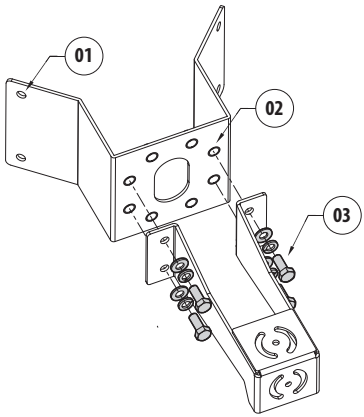

Fig. 2 Fastening for Esprit Anti-Corrosion Fixed (Pelco), NTX (VIDEOTEC).

7 Technical data

7.1 Mechanical

Bracket for UEBW (Esprit Compact (Pelco) and ULISSE EVO DUAL (VIDEOTEC)), Esprit Anti-Corrosion Fixed (Pelco), NTX (VIDEOTEC)
AISI 316L stainless steel construction
Dimensions: 120x220x128mm (4.7x8.7x5in)
Unit weight: 1.1kg (2.2lb)

8 Technical drawings

The indicated measurements are expressed in millimetres.

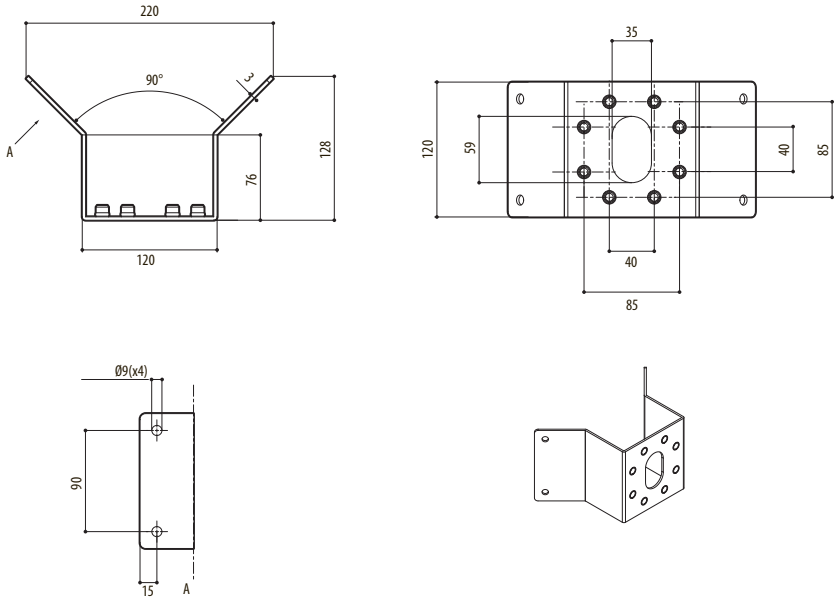

Fig. 3 UEAC.

Pelco, Inc.
625 W. Alluvial Ave., Fresno, California 93711 United States
(800) 289-9100 Tel
(800) 289-9150 Fax
+1 (559) 292-1981 International Tel
+1 (559) 348-1120 International Fax
www.pelco.com

Pelco, the Pelco logo, and other trademarks associated with Pelco products referred to in this publication are trademarks of Pelco, Inc. or its affiliates. ONVIF and the ONVIF logo are trademarks of ONVIF Inc. All other product names and services are the property of their respective companies. Product specifications and availability are subject to change without notice.

© Copyright 2023, Pelco, Inc. All rights reserved.