PELCO™

INSTALLATION

EH20 Series IP-Enabled Enclosures

Installation Manual
C6603M 4/20

Contents

Regulatory Notices 3
Radio and Television Interference 3
Korean Class A EMC 3
Warranty Statement 3
Important Safety Instructions 4
Introduction 5
Models 6
Included Mount 6
Optional Mounts 6
Accessories 6
Getting Started 7
EH20 Series Models 8
Supplied Parts List 8
User-Supplied Parts List 8
Product Label 8
EH 20 Series Product Overview 9
Installation: PoE Models (EH20-P-H) 10
Installation: 24V Models (EH20-2-H) 14
Installation: Mains Models (EH20-3-H) 18
Installing the Sun Shield 24
Installing the EM20 Mount 25
Attaching the EM20 Wall Mount to Other Mount Brackets 28
Cable Terminations 29
Ethernet Wiring Requirement for PoE+/HPOE 29

Important Notices

For more information about Pelco's product-specific important notices and thereto related information, refer to *www.pelco.com/legal*.

Regulatory Notices

This device complies with Part 15 of the FCC Rules. Operation is subject to the following two conditions: (1) this device may not cause harmful interference, and (2) this device must accept any interference received, including interference that may cause undesired operation.

Radio and Television Interference

This equipment has been tested and found to comply with the limits of a Class A digital device, pursuant to Part 15 of the FCC rules. These limits are designed to provide reasonable protection against harmful interference when the equipment is operated in a commercial environment. This equipment generates, uses, and can radiate radio frequency energy and, if not installed and used in accordance with the instruction manual, may cause harmful interference to radio communications. Operation of this equipment in a residential area is likely to cause harmful interference in which case the user will be required to correct the interference at his own expense.

Changes and modifications not expressly approved by the manufacturer or registrant of this equipment can void your authority to operate this equipment under Federal Communications Commission's rules.

CAN ICES-3(A)/NMB-3(A).

Korean Class A EMC

이 기기는 업무용 (A 급) 전자파 적합기기로서 판매자 또는 사용자는
이 점을 주의하시길 바라며 , 가정 외의 지역에서 사용하는 것을 목적
으로 합니다 .

Warranty Statement

For information about Pelco's product warranty and thereto related information, refer to *www.pelco.com/warranty*.

Important Safety Instructions

1. This product shall be installed by a qualified service person and the installation shall conform to local codes.
2. Read these instructions.
3. Keep these instructions.
4. Heed all warnings.
5. Follow all instructions.
6. Clean only with dry cloth.
7. Do not block any ventilation openings. Install in accordance with the manufacturer's instructions.
8. Do not install near any heat sources such as radiators, heat registers, stoves, or other apparatus (including amplifiers) that produce heat.
9. Only use attachments/accessories specified by the manufacturer.
10. Refer all servicing to qualified service personnel. Servicing is required when the apparatus has been damaged in any way, such as liquid has been spilled or objects have fallen into the apparatus, the apparatus has been exposed to rain or moisture, does not operate normally, or has been dropped.
11. Installation should be done only by qualified personnel and conform to all local codes, like ANSI/NFPA 70 National Electrical Code (NEC) and relevant Articles like 110, 240, 300, 400 and so on and follow permanent connection method.
12. Unless the unit is specifically marked as a NEMA Type 3, 3R, 3S, 4, 4X, 6, or 6P enclosure, it is designed for indoor use only and it must not be installed where exposed to rain and moisture.
13. Use only installation methods and materials capable of supporting four times the maximum specified load.
14. Use stainless steel hardware to fasten the mount to outdoor surfaces.
15. An all-pole main switch with a contact separation of at least 3 mm in each pole shall be incorporated in the electrical installation of the building.
16. A readily accessible disconnect device shall be incorporated in the building installation wiring.
17. The unit rated 110-230V is only suitable for AC mains circuit provided with a two poles 20A circuit breaker and a surge protector device (SPD) or surge arrester as part of the installation to address transient overvoltages exceeding Overvoltage Category II, 2500 Vpk.

CAUTION: These servicing instructions are for use by qualified service personnel only. To reduce the risk of electric shock do not perform any servicing other that contained in the operating instructions unless you are qualified to do so.

Pelco will only offer a few consumable spare parts. If electrical failure occurs, the complete unit will be replaced.

The product and/or manual may bear the following marks:

⚠ This symbol indicates that dangerous voltage constituting a risk of electric shock is present within this unit.

⚠ This symbol indicates that there are important operating and maintenance instructions in the literature accompanying this unit.

Introduction

IP-enabled, indoor/outdoor EH20 Series enclosures are designed for use with Sarix®, Sarix Professional, and Sarix Enhanced cameras. The EH20 Series is a rugged and highly reliable camera enclosure with a side-hinged lid and adjustable sun shroud designed for easy installation. Constructed from die-cast aluminum to IK10 and IP66, the EH20 Series enclosure is designed to operate in a wide range of environments and to protect electronic components in temperatures from -30º to 50ºC (-22º to 122ºF).

This document describes the installation and initial setup procedures to set up your EH20 Enclosure. For more information about operating your camera, refer to the operation manual specific to the product.

NOTE: For additional information about product documentation in English and other languages, go to www.pelco.com and navigate to the EH20 Enclosure website.

Models

EH20	Basic enclosure with die-cast construction: Sun shroud, IP66 and Type 4X, cable entry glands and mounting holes
EH20-M	Enclosure with die-cast construction: Wall mount bracket included, sun shroud, IP66 and Type 4X, cable entry glands and mounting holes
EH20-2-H	Enclosure with die-cast construction: Indoor/environmental, wall mount bracket included, heater and blower, 24 VAC, sun shroud, IP66 and Type 4X, cable entry glands and mounting holes
EH20-3-H	Enclosure with die-cast construction: Indoor/environmental, wall mount bracket included, heater and blower, 110 VAC-230 VAC, sun shroud, IP66 and Type 4X, cable entry glands and mounting holes
EH20-P-H	Enclosure with die-cast construction: Indoor/environmental, wall mount bracket included, heater and blower, PoE+/HPOE, sun shroud, IP66 and Type 4X, cable entry glands and mounting holes

Included Mount

EM20	Wall mount bracket with internal cable management

Optional Mounts

EP20	Large pole mount bracket for EM20 wall mount (for poles up to 8-inch diameter)
EC20	Ceiling mount bracket
EP21	Small pole mount for EM20 wall mount (for poles up to 4-inch diameter)

Accessories

EM20JB	Wall mount junction box for EM20 wall mount
PD-9601G/AC*	Single-port, HPoE midspan

*This PoE injector has been specifically designed to work with this enclosure when heaters are in use. Other PoE injectors may not work.

Getting Started

Before installing your EH20 enclosure, thoroughly familiarize yourself with the information in the installation section of this manual.

NOTE: Please refer to your camera installation manual for installing and configuring the camera within the enclosure.

EH20 Series Models

Supplied Parts List

Qty	Description
1	EH20 Series enclosure
1	EH20 Installation manual
2	PG11 gland fittings with nut
1	EM20 wall mount (except with EH20 base enclosure)
2	¼-20 x .375-inch screws (for sun shroud mounting)
2	¼-inch nylon flat washers (for sun shroud mounting)
1	¼-20 x .375-inch screw (for camera mounting)
1	¼-inch lock washer (for camera mounting)
1	¼-inch steel flat washer (for camera mounting)
1	5 mm thick metal spacer (optional for camera mounting)
1	¼-20 x .625-inch screw (for camera mounting when using spacer)
1	T30 Torx wrench
1	Ethernet Patch cable (PoE model only)

User-Supplied Parts List

In addition to the standard tools and cables required for a video security installation, you will need to provide the following items:

Qty	Description
1	CAT5e or better and marked with CL3 Ethernet cable
1	Phillips screwdriver
1	Flat-head screwdriver
1	Crimping tool
1	RJ-45 connector for Ethernet cable

Note: The mounting hardware is not provided.

Product Label

The product label lists the model number, date code, and serial number. This information might be required for setup. A product label is located on the inside cover of the enclosure and on the side the product box.

EH 20 Series Product Overview

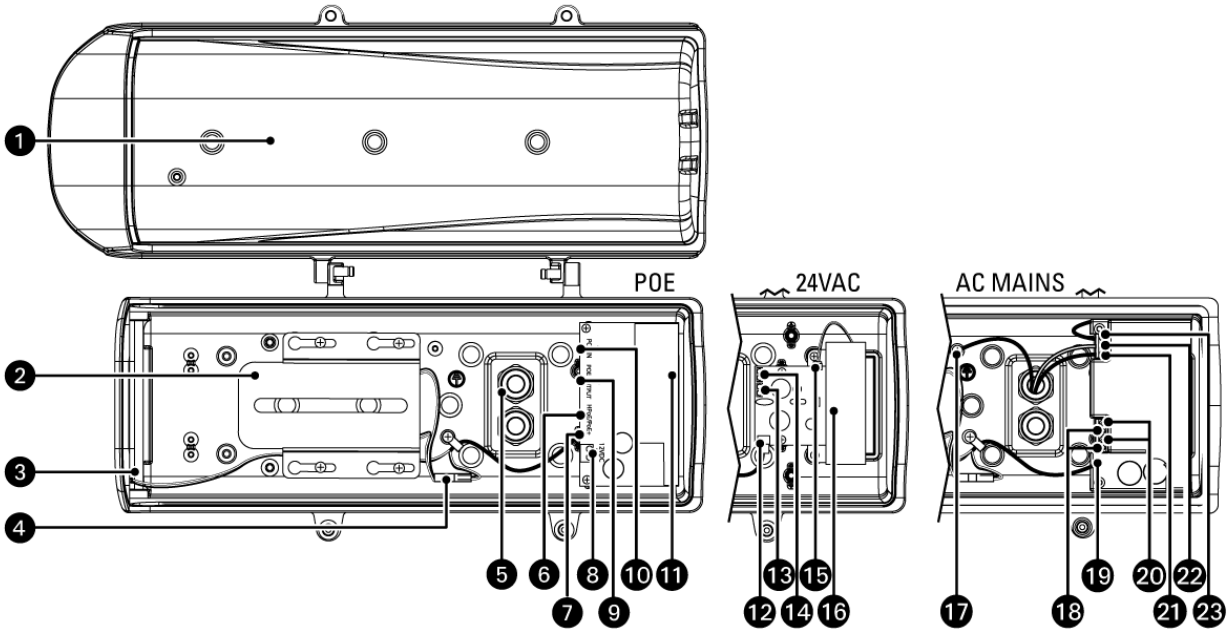

(1) Enclosure lid

(2) Camera mounting plate

(3) Window defogging heater

(4) Mounting plate heating connector

(5) Waterproof cable gland

(6) HPOE/PoE+ selection

(7) Heater/defogger power connection

(8) 12 VDC (1.0A) for future upgrades (do not use)

(9) PoE Output (13W) to camera

(10) PoE+/HPOE Input (Connected to LPS or Class 2 power source)

(11) PoE and media converter

(12) Heater/defogger power connection

(13) 24 VAC power in (Connected to LPS or Class 2 power source)

(14) 24 VAC power out (24Vac/1A) to camera

(15) Fan connector

(16) Fan

(17) Primary Earth ground

(18) +12 VDC reference ground to camera

(19) Heater/defogger power connection

(20) +12V DC power output (12Vdc/3.6A) to camera

(21) Live/hot in

(22) Neutral

(23) PCB Earth ground

Installation: PoE Models (EH20-P-H)

1. For installing an IP camera, pass an Ethernet cable (CAT5E or better and marked with CL3) through the gland fitting on the bottom of the enclosure. Please refer to the camera manual for other types of cameras for installation.

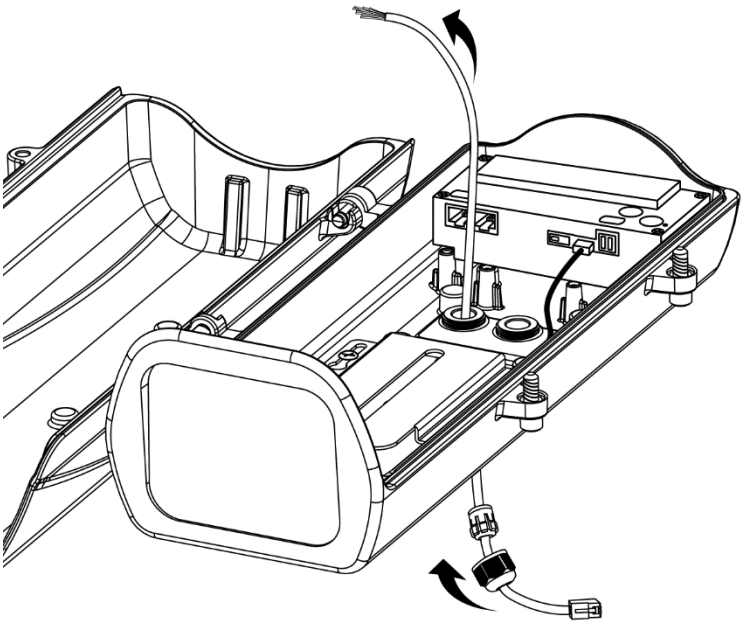

You may need to remove the RJ-45 connector, and use a crimping tool to connect the Ethernet wires to an RJ-45 connector inside the enclosure. Use an Ethernet cable of the width of 5-6.5mm. Follow the T568B pinout shown below and make sure both ends of the Ethernet cable match (Straight Through Cable).

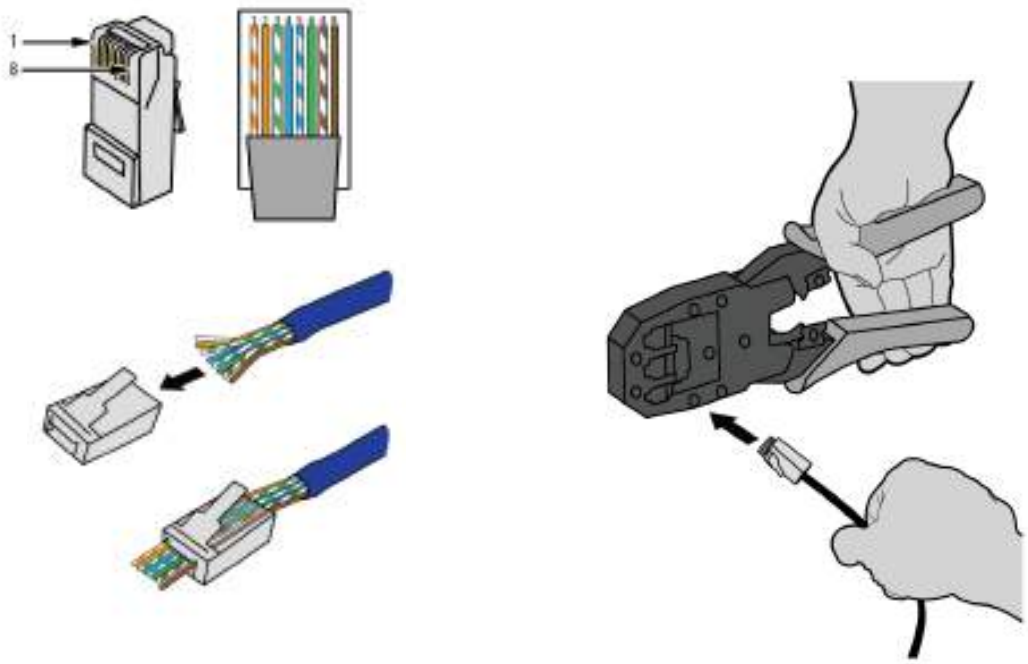

2. Select the PoE mode by switching the HPoE/PoE+ switch to either HPoE or PoE+. If HPoE mode is selected, a PD-9601G/AC midspan injector must be used. This mode will allow the enclosure to go down to -30ºC. Please note that if PoE+ is selected, this enclosure does not support LLDP (Link Layer Discovery Protocol) POE+ negotiation. Please refer to your network administrator to enable full 30W of power to the enclosure if a managed POE Network Switch is used. POE+ will only allow the enclosure to go down to -10ºC.

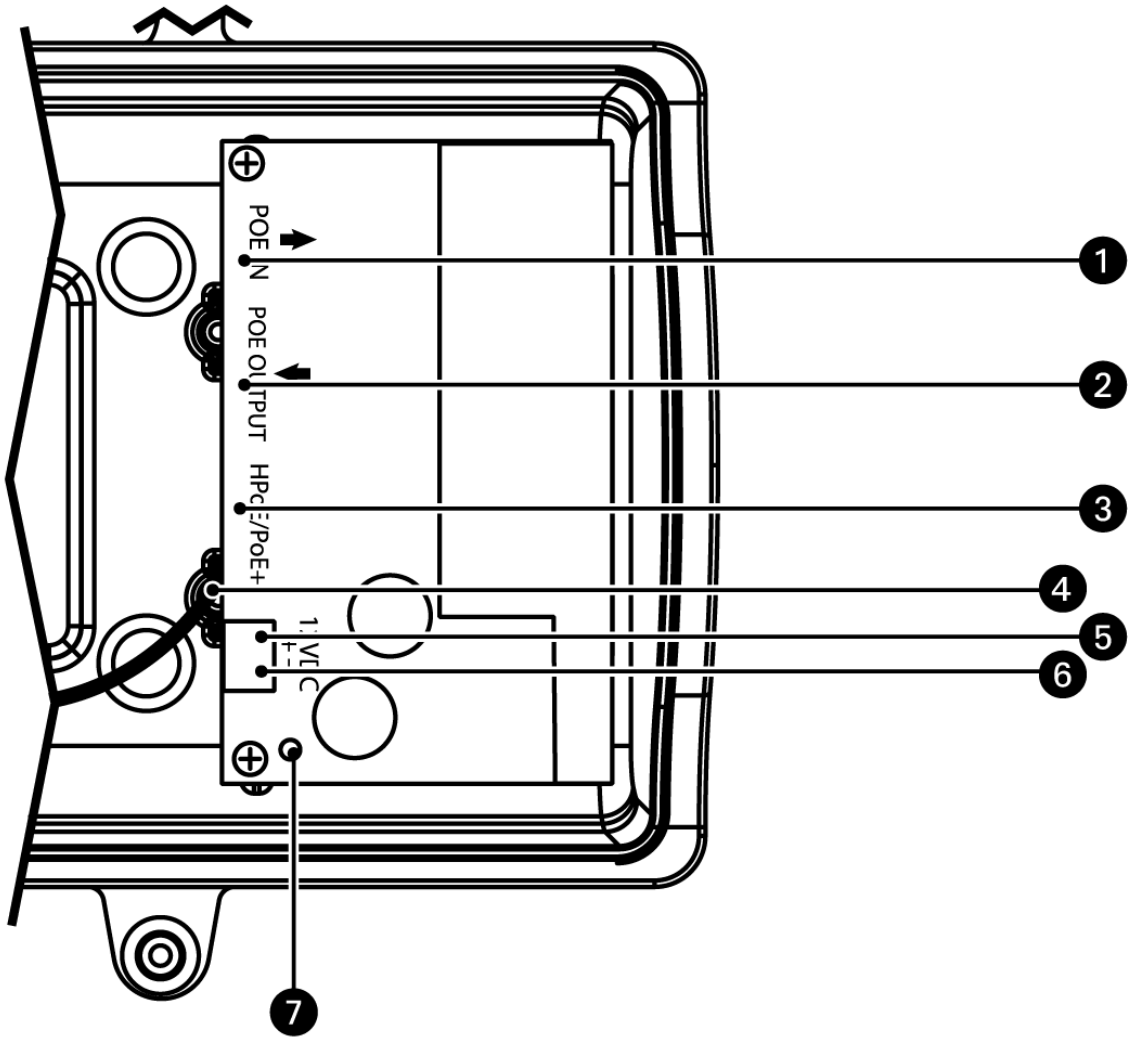

1) PoE+/HPOE Input
2) PoE Output to camera
3) HPoE/PoE+ selection
4) Heater/defogger power connection
5) 12 VDC for future upgrades (Do not use)
6) 12 VDC ground for future upgrades (Do not use)
7) Power LED

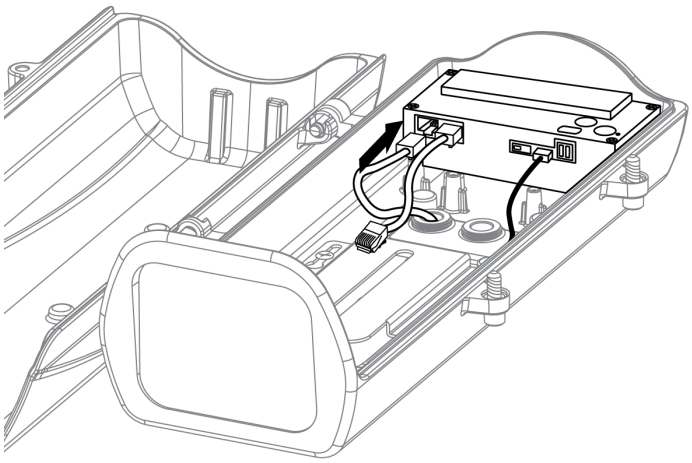

3. Insert the input PoE Ethernet cable to the port “PoE Input.” Confirm that there is power from the power LED.

4. When done, tighten up the gland fitting nuts.

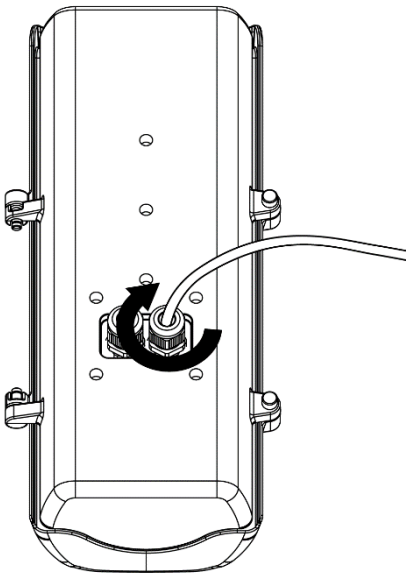

5. Attach the camera mount bracket to your camera using (1) ¼-20 x .375-inch screw, (1) ¼-inch steel flat washer, and the (1) ¼-inch lock washer. Adjust the position of the camera/lens assembly on the mount bracket so that the lens sits as close as possible to the viewing window when it is inside the enclosure.

NOTE: Some longer camera and lens combinations may require rotating the camera mount bracket and/or raising the height of the camera above the camera mount bracket to achieve proper position. Use the (1) 5mm thick metal spacer and (1) 1/4-20 x .675-inch screw (included) to raise the camera height.

6. Secure the camera mount bracket to the enclosure by tightening the four screws through the keyhole slots. Connect the plug for the heater on the bottom of the mounting bracket to the socket branching off the wire to the defogger.

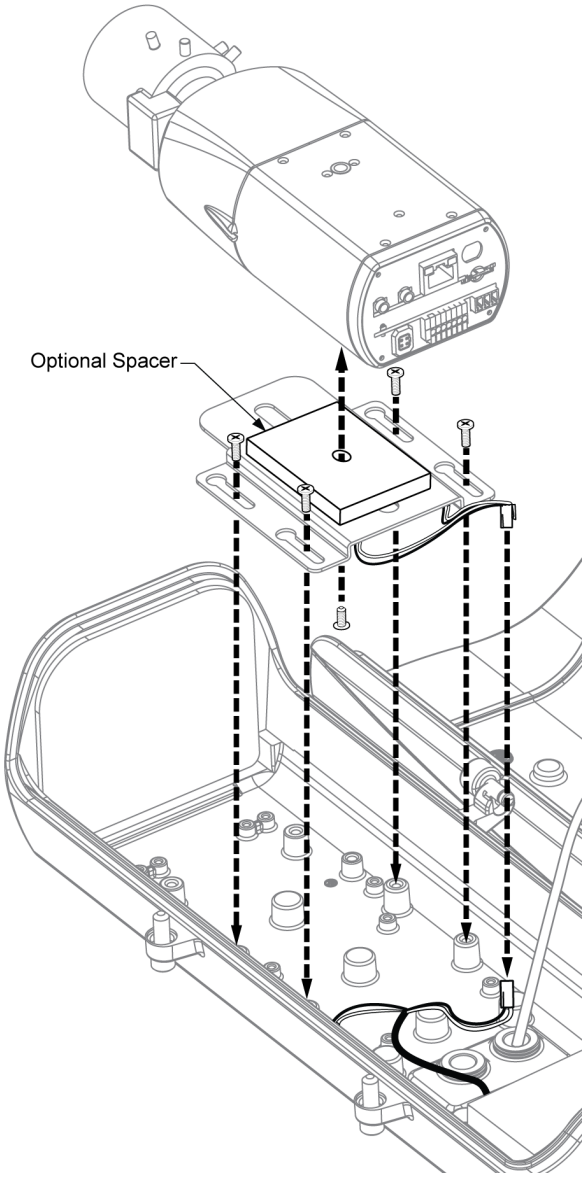

7. Using the supplied Ethernet patch cable, connect from “PoE Output” to the camera PoE Input. Please only use an IEEE802.3af compliant IP camera. There will be a risk of damage to camera and enclosure if a non-compliant POE camera is used.

8. Close the lid of the enclosure and push down on the top of the lid while turning the lid securing screws to get the screws started. Use the supplied T30 Torx wrench to tighten the screws.

Installation: 24V Models (EH20-2-H)

1. For installing an IP camera, pass an Ethernet cable (CAT5E or better and marked with CL3) through the gland fitting on the bottom of the enclosure. Please refer to the camera manual for any other types of cameras for installation.

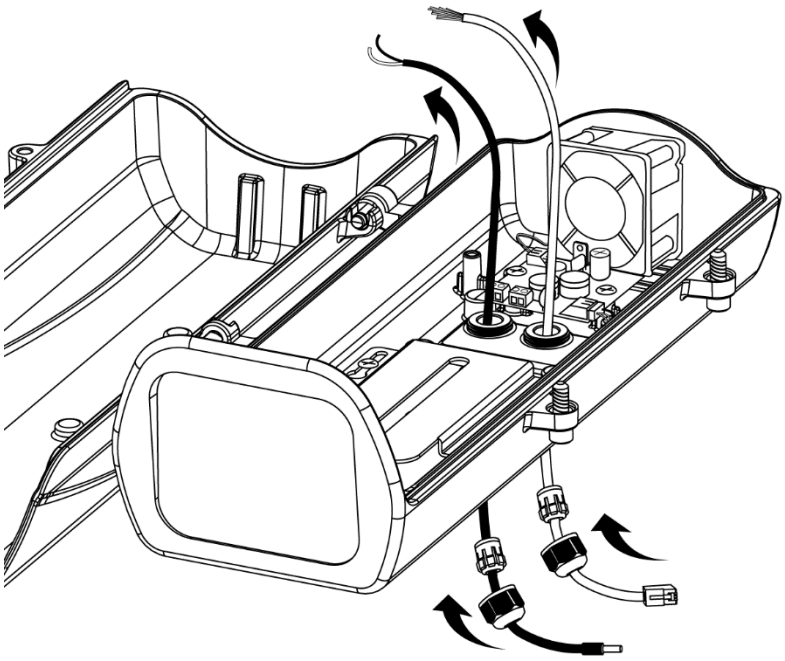

You may need to remove the RJ-45 connector, and use a crimping tool to connect the Ethernet wires to an RJ-45 connector inside the enclosure. Use an Ethernet cable of the width of 5-6.5mm. Follow the T568B pinout show below and make sure both ends of the Ethernet cable match (Straight Through Cable).

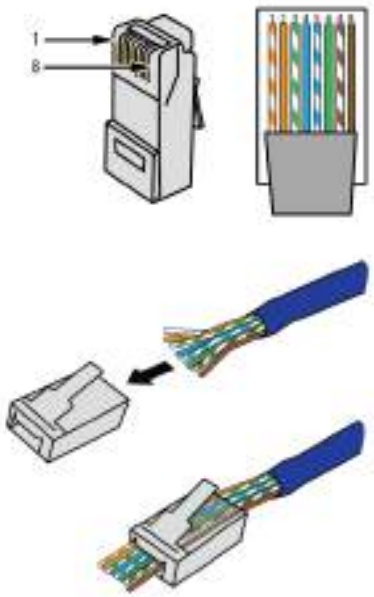

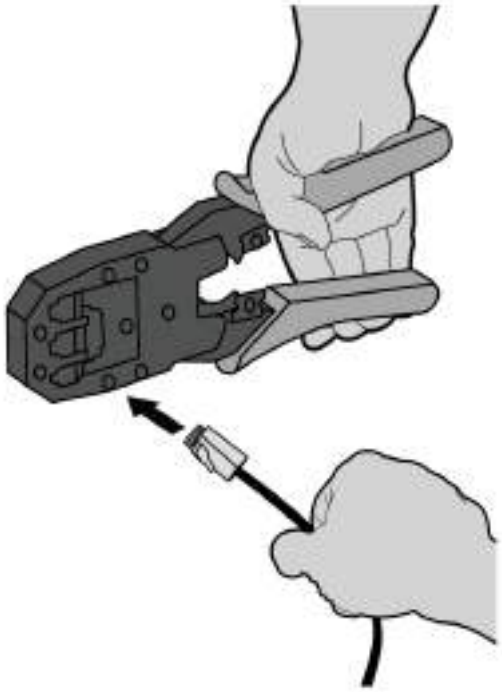

2. Insert the stripped wires from the 24VAC in line into the power input on the electric board as shown below and tighten in place.

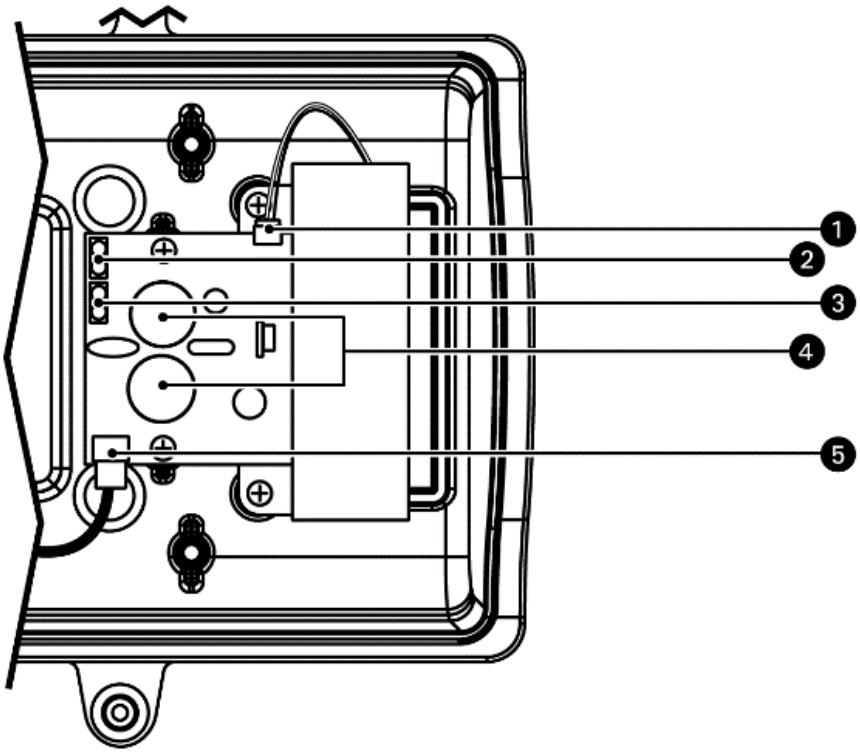

1) Fan connector
2) 24VAC out
3) 24VAC in
4) Temperature sensors
5) Heater/defogger power connection

Wire Gauge				
Total VA	**20 AWG (0.5 mm²)**	**18 AWG (1.0 mm²)**	**16 AWG (1.5 mm²)**	**14 AWG (2.5 mm²)**
10	86 m (283 ft)	137 m (451 ft)	218 m (716 ft)	348 m (1142 ft)
20	42 m (141 ft)	68 m (225 ft)	109 m (358 ft)	174 m (571 ft)
30	28 m (94 ft)	45 m (150 ft)	73 m (238 ft)	115 m (380 ft)
40	21 m (70 ft)	34 m (112 ft)	54 m (179 ft)	86 m (285 ft)
50	17 m (56 ft)	27 m (90 ft)	43 m (143 ft)	69 m (228 ft)

3. Connect the 24 VAC out on the board to the power connector provided with your camera as shown below.

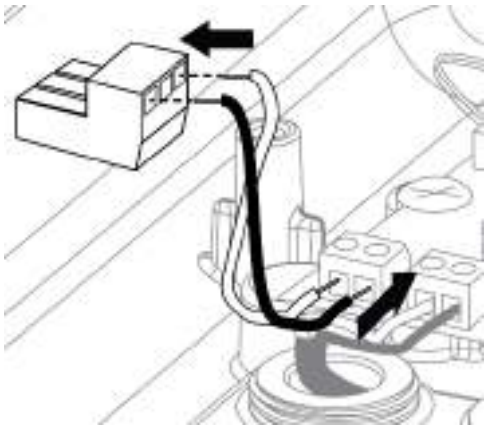

4. When complete, tighten up the gland fitting nuts.

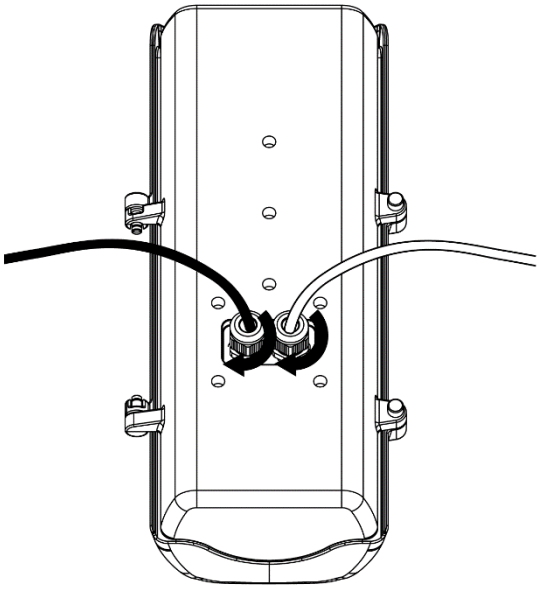

5. Attach the camera mount bracket to your camera using (1) ¼-20 x .375-inch screw, (1) ¼-inch steel flat washer, and the (1) ¼-inch lock washer. Adjust the position of the camera/lens assembly on the mount bracket so that the lens sits as close as possible to the viewing window when it is inside the enclosure.

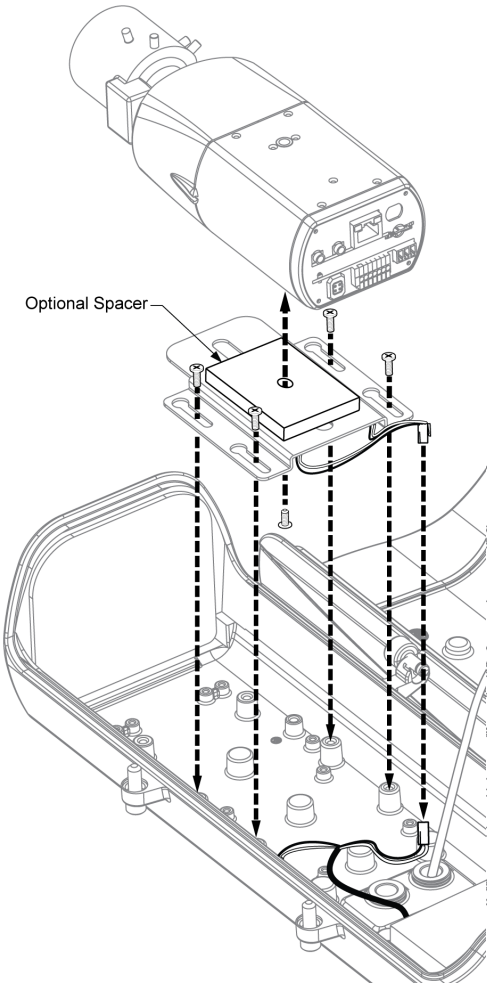

NOTE: Some longer camera and lens combinations may require rotating the camera mount bracket and/or raising the height of the camera above the camera mount bracket to achieve proper position. Use the (1) 5mm thick metal spacer and (1) 1/4-20 x .675-inch screw (included) to raise the camera height.

6. Secure the camera mount bracket to the enclosure by tightening the four screws through the keyhole slots. Connect the plug for the heater on the bottom of the mounting bracket to the socket branching off the wire to the defogger.

7. Connect the Ethernet cable and power plug to the camera.

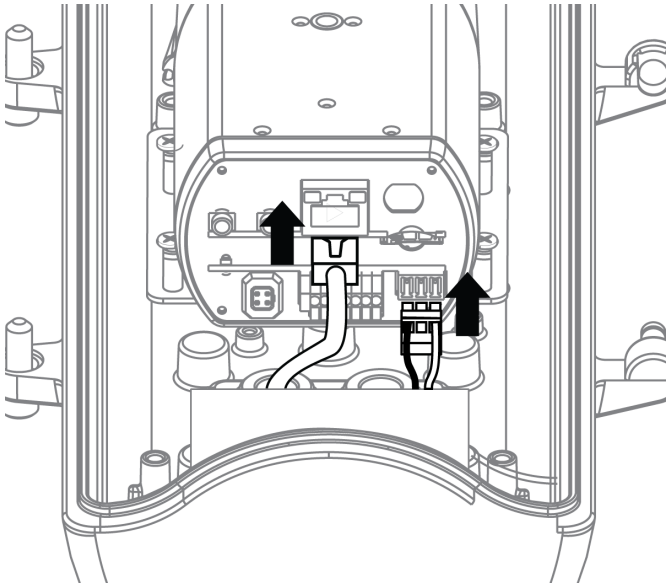

8. Close the lid of the enclosure and push down on the top of the lid while turning the lid securing screws to get the screws started. Use the supplied T30 Torx wrench to tighten the screws.

Installation: Mains Models (EH20-3-H)

1. For installing an IP camera, pass an Ethernet cable (CAT5E or better and marked with CL3) through the gland fitting on the bottom of the enclosure. Please refer to the camera manual for other types of cameras for installation. Pass the Mains wiring through the other gland fitting. For safety reasons, please do not run high voltage wires with low voltage wires through the same gland and wires shall comply to the following:
   - Only use specific suitable high voltage wires according to ANSI/NFPA 70 National Electrical Code (NEC) permanent wiring connection. For supply connections, use wire suitable for at least 85º C and 12 to 14 AWG. Use copper wire or aluminum conductors.
   - High voltage wires must be covered by 0.4 mm thick UL recognized tubing.
   - RJ-45 cable must be covered by 0.4 mm thick UL recognized tubing.

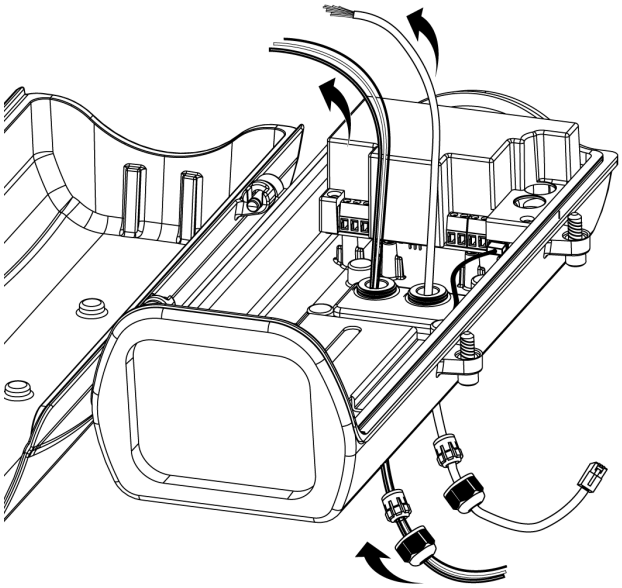

You may need to remove the RJ-45 connector, and use a crimping tool to connect the Ethernet wires to an RJ-45 connector inside the enclosure. Use an Ethernet cable of the width of 5-6.5mm. Follow the T568B pinout shown below and make sure both ends of the Ethernet cable match (Straight Through Cable).

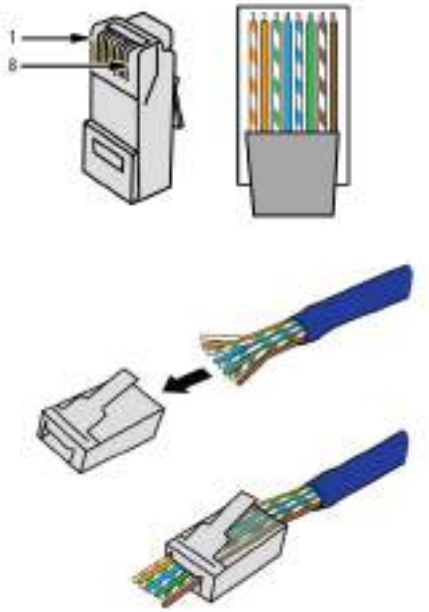

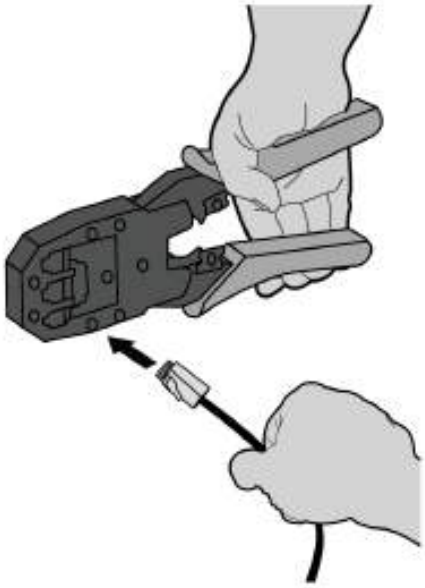

2. Insert the stripped power wires (110-230 VAC) from the mains into the power input on the enclosure as shown below and tighten in place. Attach the earth ground line onto the body of the enclosure. If there are any other wires connected to the earth ground screw, please make sure that the incoming earth ground must be the first wire to contact the enclosure.

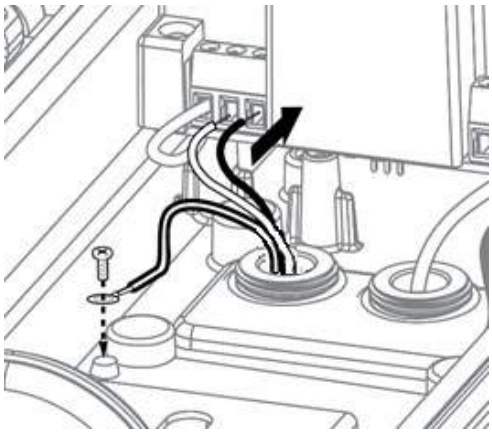

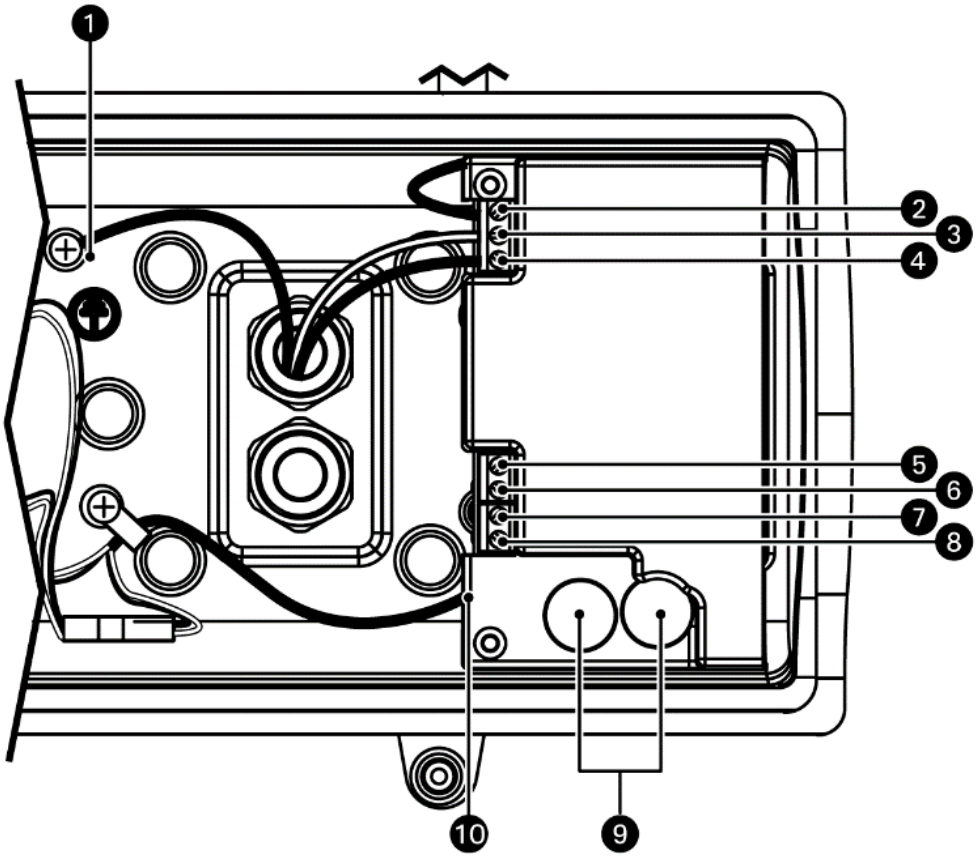

1) Earth ground line connection point
2) Earth ground line for power module
3) Neutral connection
4) Live/hot connection
5) +12V DC out
6) Ground
7) +12V DC out
8) Ground
9) Temperature sensors
10) Heater/defogger power connection

3) Connect the 12V DC and Ground to the plug for your camera as shown. Insure the + and ground match up with your camera input.

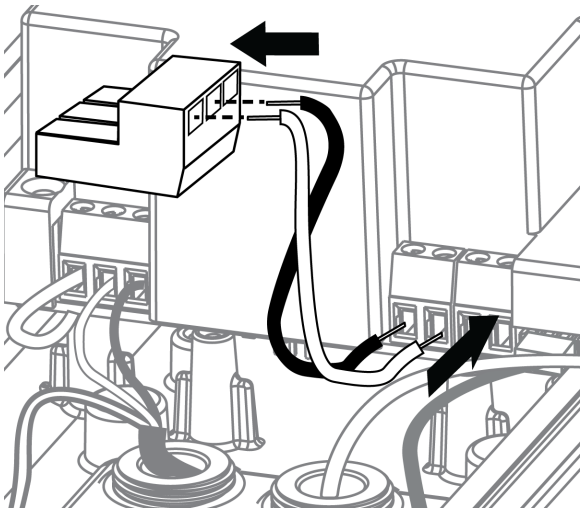

4) When done, tighten up the gland fitting nuts.

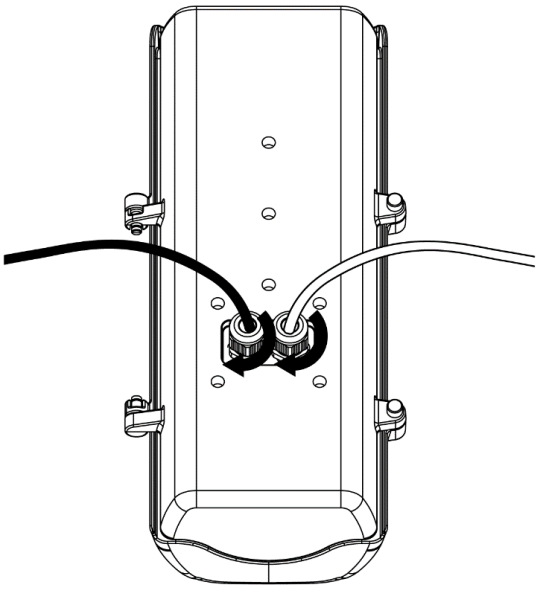

5) Attach the camera mount bracket to your camera using (1) ¼-20 x .375-inch screw, (1) ¼-inch steel flat washer, and the (1) ¼-inch lock washer. Adjust the position of the camera/lens assembly on the mount bracket so that the lens sits as close as possible to the viewing window when it is inside the enclosure.

NOTE: Some longer camera and lens combinations may require rotating the camera mount bracket and/or raising the height of the camera above the camera mount bracket to achieve proper position. Use the (1) 5mm thick metal spacer and (1) 1/4-20 x .675-inch screw (included) to raise the camera height.

6) Secure the camera mount bracket to the enclosure by tightening the four screws through the keyhole slots. Connect the plug for the heater on the bottom of the mounting bracket to the socket branching off the wire to the defogger.

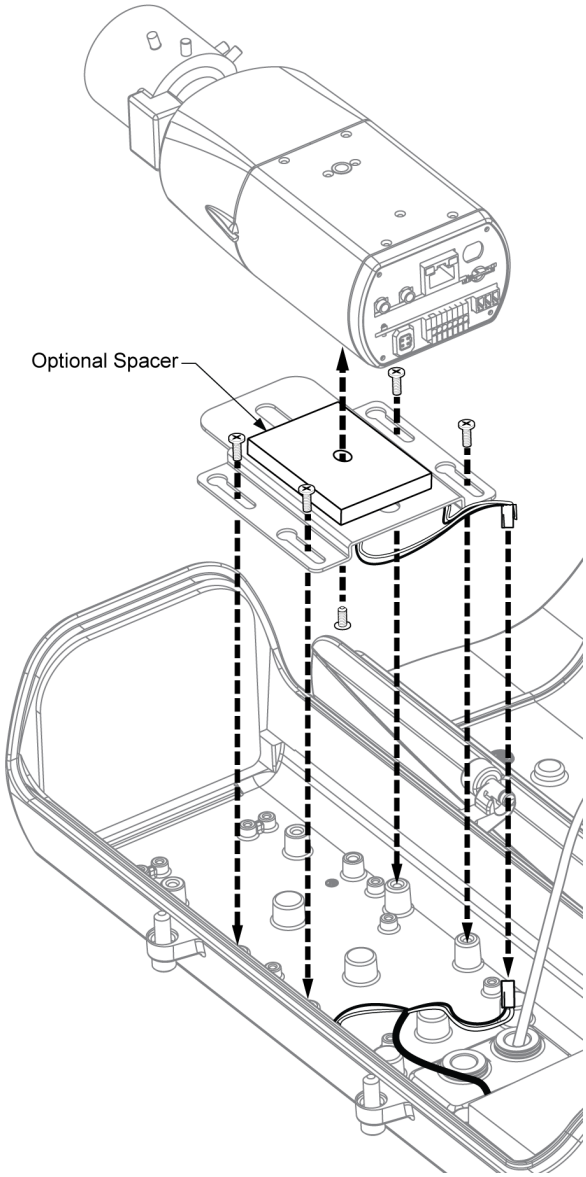

7) Connect the Ethernet cable and power plug to the camera.

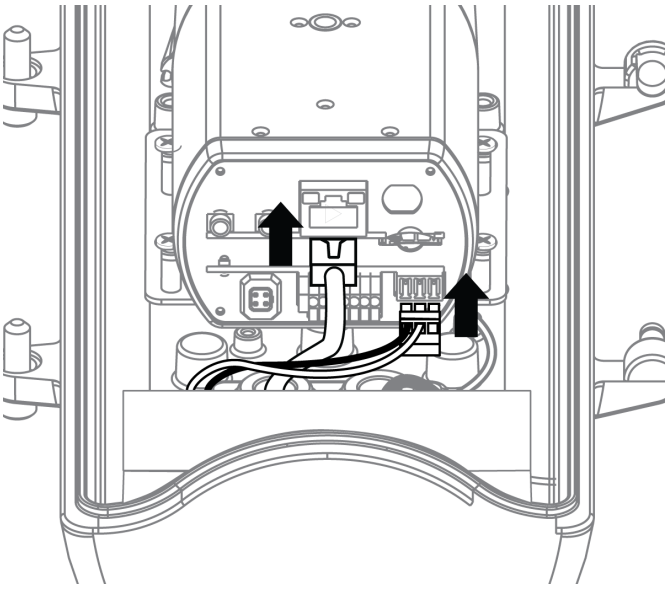

8) Close the lid of the enclosure and push down on the top of the lid while turning the lid securing screws to get the screws started. Use the supplied T30 Torx wrench to tighten the screws.

Installing the Sun Shield

1. If you are installing the EH20 enclosure outdoors it is recommended that you install the sun shield to help lower the internal temperature of the enclosure and keep the glare off the front window.

2. Set the sun shield on top of the hex standoffs on top of the lid as show.

3. Install (1) ¼-20 x .375-inch screw and (1) ¼-inch nylon flat washer through each mounting slot on the sun shield and thread the screws into the hex standoffs.

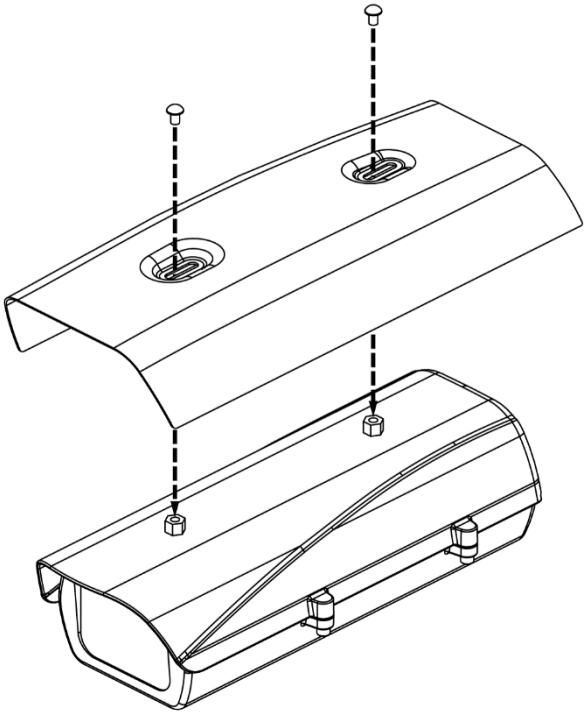

4. Adjust the position of the sun shield forwards or backwards on the enclosure as needed and then tighten the screws using a Philips screwdriver.

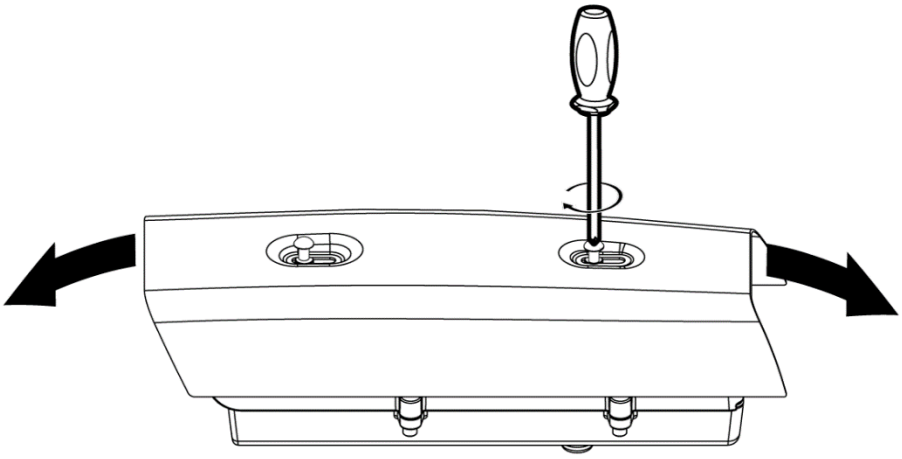

Installing the EM20 Mount

1. Install the EM20 wall mount flush against a flat surface. Drill mounting holes and a cable routing hole (if preferred) on a wall. Install the mount using four screws of appropriate size and length for the surface being mounted to.

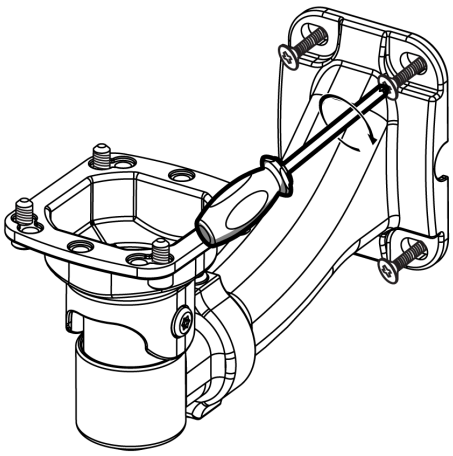

2. Lift the whole enclosure up to the installation position and pass the Ethernet cable through the center of the wall mount.

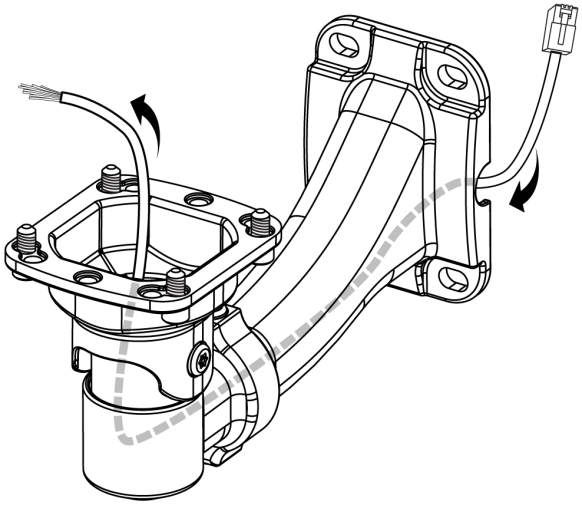

NOTE: The Ethernet cable needs to pass through the enclosure's gland fitting nut as shown in the illustration below.

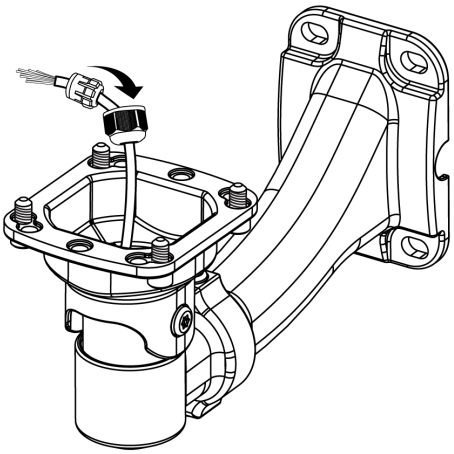

3. Mount the enclosure onto the installed wall bracket, and secure the connection by tightening the four socket screws using the supplied T30 Torx wrench. Due to the weight of the enclosure, it is best to have two people mounting the enclosure.

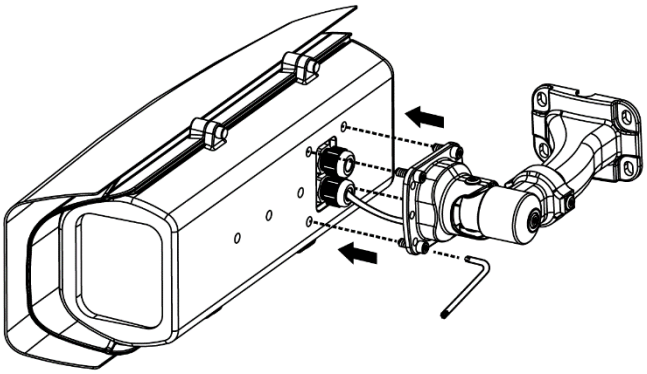

Attaching the EM20 Wall Mount to Other Mount Brackets

1. Attach the EM20 wall mount to the EP20, EP21, or EM20JB mounts using the specific installation instructions supplied with those mounts.

Cable Terminations

Ethernet Wiring Requirement for PoE+/HPOE

Connect a shielded/unshielded Cat5 cable or higher (Cat5e, Cat6) cable (not supplied) to the POE network connector. The 8-pin port includes video over Ethernet, and PoE for the camera. PoE injects power over the same cabling that carries the network data, eliminating the need for a separate power supply. This simplifies the installation and operation of the camera without affecting network performance.

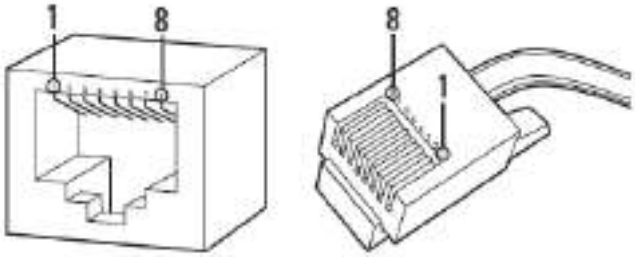

Table 1 POE+ Pin Definition

PoE Mode A			PoE Mode B		
Pin	**Function**		**Pin**	**Function**	
1	TxRx A +	DC +	1	TxRx A +	
2	TxRx A -	DC +	2	TxRX A -	
3	TxRx B +	DC -	3	TxRx B +	
4	TxRx C +		4	TxRx C +	DC +
5	TxRx C -		5	TxRx C -	DC +
6	TxRx B -	DC -	6	TxRx B -	
7	TxRx D +		7	TxRx D +	DC -
8	TxRx D -		8	TxRx D -	DC -

Table 2 HPOE Pin Definition

Pin	Function	
1	TxRx A +	DC1 +
2	TxRx A -	DC1 +
3	TxRx B +	DC1 -
4	TxRx C +	DC2 +
5	TxRx C -	DC2 +
6	TxRx B -	DC1 -
7	TxRx D +	DC2 -
8	TxRx D -	DC2 -

Pelco Troubleshooting Contact Information

If the instructions provided fail to solve your problem, contact Pelco Product Support at 1-800-289-9100 (USA and Canada) or +1-559-292-1981 (international) for assistance. Be sure to have the serial number and model number available when calling.

Do not try to repair the unit yourself. Leave maintenance and repairs to qualified technical personnel only.

Pelco, Inc. 625 W. Alluvial Fresno, California 93711 USA USA & Canada

Tel (800) 289-9100 Fax (800) 289-9150

International Tel +1 (559) 292-1981 Fax +1 (559) 348-1120

www.pelco.com